HOSHIZAKI

Parts List

Steelheart Series
Refrigerated Kitchen Equipment

Models
DT1A-HS
DT2A-FS
Half Solid (HS)
Full Solid (FS)

hoshizakiamerica.com

Number: 71429
Issued: 8-21-2019
Revised: 5-12-2026

CONTENTS

Auxiliary Codes 3
Note About Ordering Parts 4
A. Main Assembly 5
    DT1A-HS 5
    DT2A-FS 7
B. Refrigeration Circuit 9
    DT1A-HS 9
    DT2A-FS 11
C. Door-Half Solid 13
    Right Hinged 13
    Left Hinged 14
D. Door-Full Solid 16
    Right Hinged 16
    Left Hinged 17
E. Accessories & Labels 19

Auxiliary Codes

DT1A-HS

H-5 December 2018
J-5 July 2019
J-6 August 2019
K-5 February 2020
L-5 January 2021
M-5 January 2022
N-5 April 2023
N-7 August 2023
N-8 December 2023
P-5 February 2024
P-6 June 2024
Q-5 January 2025
Q-6 May 2025
R-5 January 2026
R-6 March 2026

DT2A-FS

J-5 March 2019
J-7 July 2019
K-5 July 2020
K-6 October 2020
L-5 July 2021
M-5 July 2022
N-5 March 2023
N6 September 2023
P-5 February 2024
P-6 August 2024
Q-5 February 2025
Q-6 May 2025
Q-7 September 2025
R-5 February 2026

Auxiliary Code Breakdown

The auxiliary code is the first two characters in the serial number. The first character indicates the year. Years progress or regress in alphabetical order. The series runs from "A" through "V" and the letters "I" and "O" are skipped. The second character indicates significant part changes within a year. Base is "5" and this number advances for each change. In cases where there is a letter in parentheses, this designates the month. This is the last character in the serial number. The series runs from "(A)" through "(M)" and the letter "(I)" is skipped. This designation is only included when identifying a parts change within an auxiliary code.

Note About Ordering Parts

Most assemblies cannot be ordered as complete units; parts in the assemblies generally must be ordered separately.

A. Main Assembly
DT1A-HS
H-5 to R-6

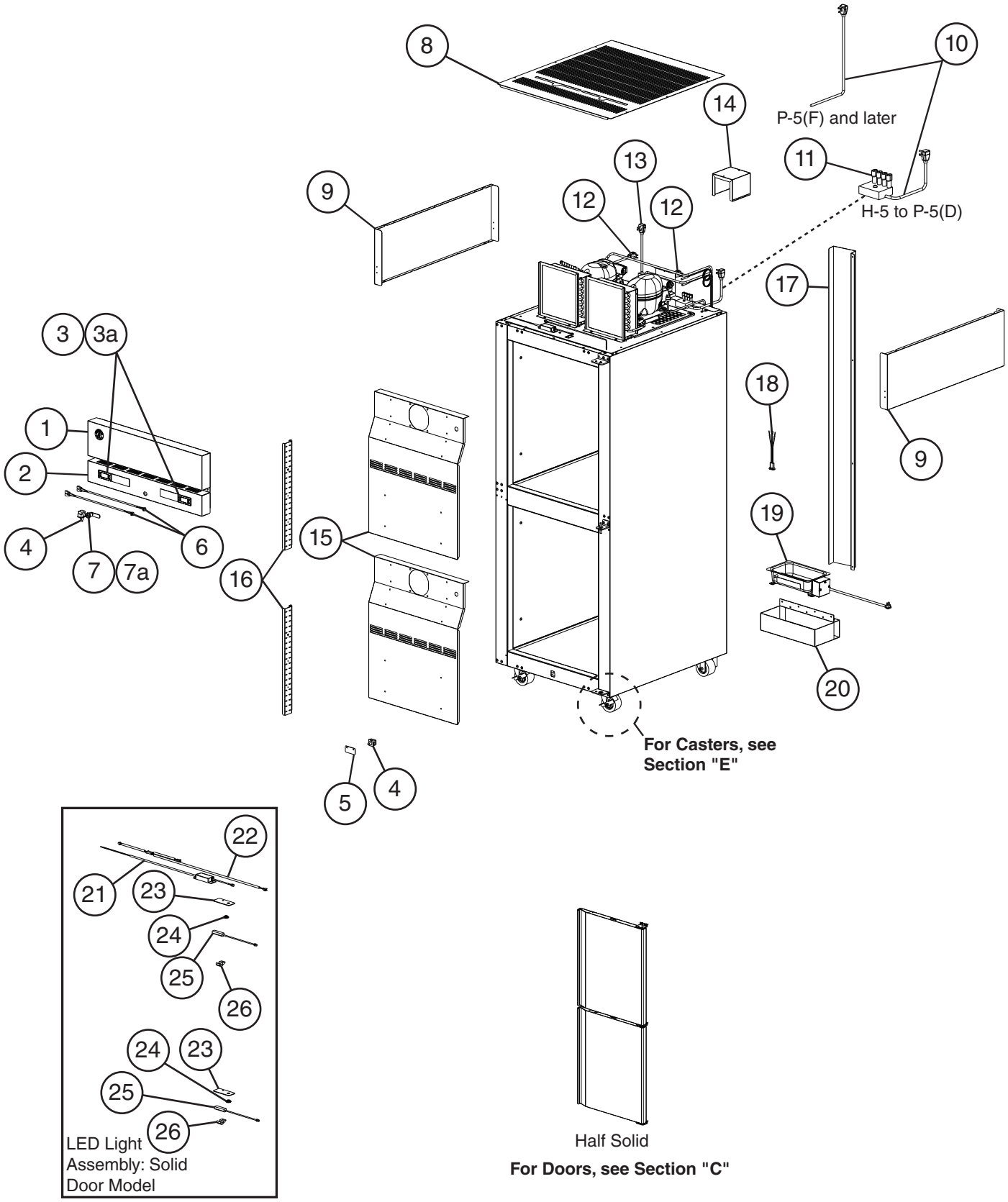

Title: A. Main Assembly Model: DT1A-HS

Index No.	Description	Material or Model Number	Part Number	Required Number								
				H-5	J-5 (F)	J-5 (G)	J-5 (H)	J-6 to K-5 (G)	K-5 (H) to P-5 (D)	P-5 (F) to Q-5 (C)	Q-5 (D) to R-6 (C)	R-6 (D)
1	Front Panel		3A9604G01	1	1	1	1	1	1	1	1	1
2	Control Panel		2A8929-01	1	1	1	1	1	1	1	1	1
3	Control Module	**Refrigerator**	4A6195G01	1	1	1	1	1	1	1	1	1
		Freezer	4A6761G01	1	1	1	1	1	1	1	1	1
3a	Control Module Mounting Clip		4A5502-01	4	4	4	4	4	4	4	4	4
4	Door Switch		3A1826-01	2	2	2	2	2	2	2	-	
			3B2145-01								2	2
5	Door Switch Bracket		4A6340-01	1	1	1	1	1	1	1	1	1
6	Door Switch Wire Harness		4A6203-01	2	2	2	2	2	2	2	2	2
7	Lock (includes item 7a)		4A4924-01	1	1	1	1	1	1	1	1	1
7a	Key (includes 2 keys)		4A5453-01	1	1	1	1	1	1	1	1	1
8	Top Louver		2A8927-01	1	1	1	1	1	-			
			2A9686-01						1	1	1	1
9	Side Panel		2A8252-01	2	2	2	2	2	2	2	2	2
10	Wire Harness Power Supply Cord		3A9838-01	2	-							
			3A9838-02		2	2	2	2	2	-		
			3B1858-01							1	1	-
			3B2545-01									1
11	Connector Cap		4A6229-01	4	4	4	4	4	4	-		
12	Condensing Unit Power Supply Cord		4A6460-01		2	2	2	2	2	-		
13	Main Power Supply Cord		4A0520-01	1	1	1	1	1	1	-		
14	Control Box Cover		2A9137-01	1	1	1	1	1	1	-		
15	Evaporator Fan Shroud		2A8931G01	2	2	-						
			2A9243-01			2	-					
			2A9346-01				2	-				
			2A9388-01					2	2	2	2	-
			2B1807-01									2
16	Pilaster		3A9974-01	8	8	8	8	8	8	8	8	8
17	Pipe Cover		2A8950-01	1	1	1	1	1	1	1	1	1
18	Heated Condensate Pan Receptacle		4A6049-01	1	1	1	1	1	1	1	1	1
19	Heated Condensate Pan		3B0185-01	1	1	1	1	1	1	1	1	1
20	Heated Condensate Pan Bracket		3B0247-01	1	1	1	1	1	1	1	1	1
21	LED Driver		1A5501-01	1	1	1	1	1	1	1	1	1
22	LED Harness		4A6080-01	1	1	1	1	1	1	1	1	1
23	LED Bracket		3A9973-01	2	2	2	2	2	2	2	2	2
24	LED Bushing		425307-02	2	2	2	2	2	2	2	2	2
25	LED Lamp		3B0042-01	2	2	2	2	2	2			
26	LED Clip		4A5906-01	2	2	2	2					

A. Main Assembly
DT2A-FS
J-5 to R-5

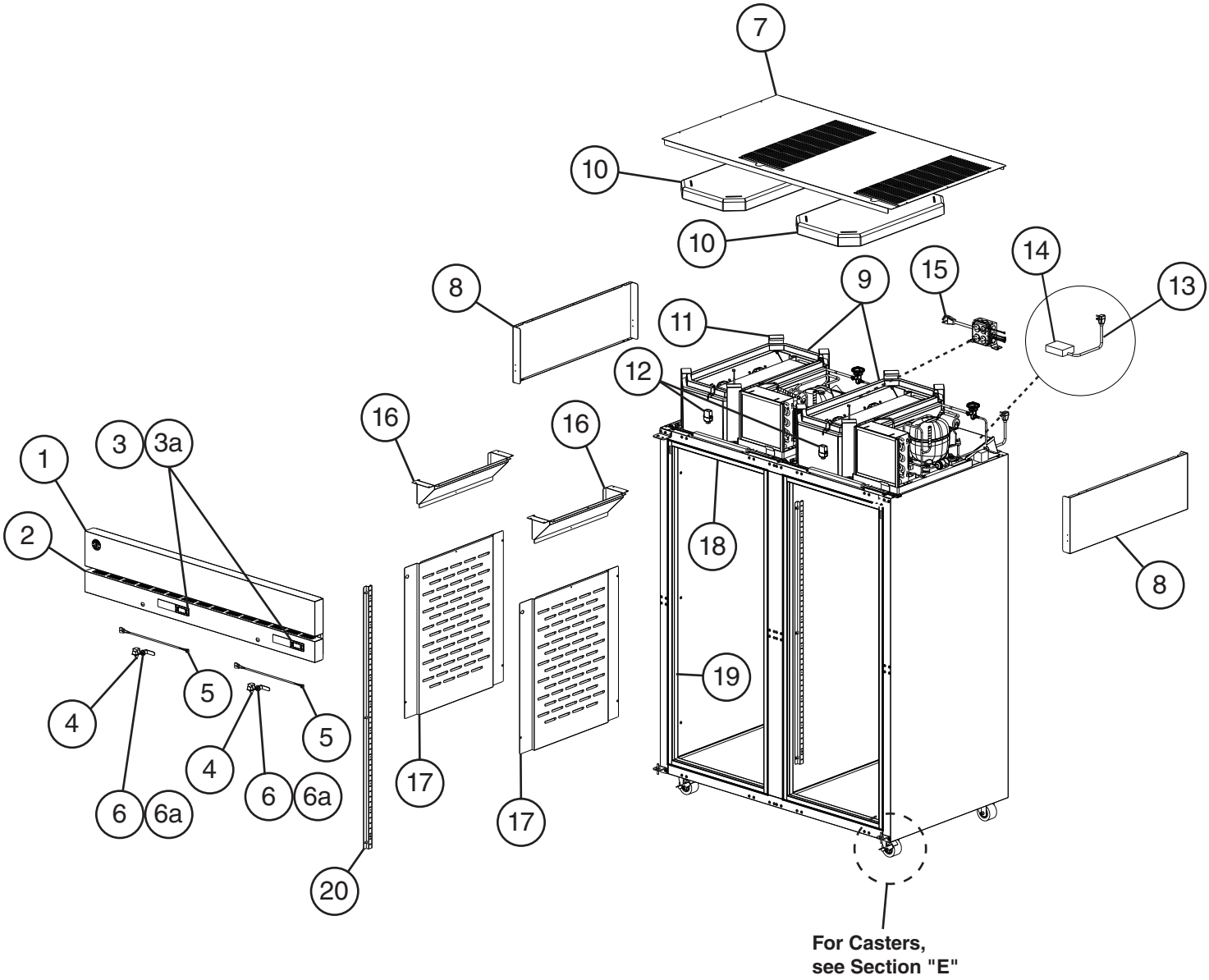

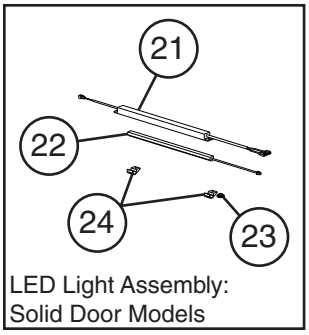

LED Light Assembly:
Solid Door Models

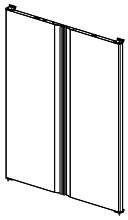

Full Solid

For Doors, see Sections "D"

Title: A. Main Assembly Model: DT2A-FS												
				Required Number								
Index No.	Description	Material or Model Number	Part Number	J-5 to P-5 (D)	P-5 (E) to Q-5	Q-6 to R-5						
1	Front Panel		3A9740G01	1	1	1						
2	Control Panel		2A9063-01	1	1	1						
3	Control Module	**Refrigerator**	4A6195G01	1	1	1						
		Freezer	4A6196G01	1	1	1						
3a	Control Module Mounting Clip		4A5502-01	4	4	4						
4	Door Switch		3A1826-01	2	2	-						
			3B2145-01			2						
5	Door Switch Wire Harness		4A6203-01	2	2	2						
6	Lock (includes item 5a)		4A4924-01	2	2	2						
6a	Key (includes 2 keys)		4A5453-01	2	2	2						
7	Top Louver		2A9064-01	1	1	1						
8	Side Panel		2A8252-01	2	2	2						
9	Evaporator Case		1A4781-01	1	1	1						
10	Evaporator Cover		1A4782-01	1	1	1						
11	Evaporator Case Latch		3A9802-01	8	8	8						
12	Pressure Relief Valve		4A5694-01	2	2	2						
13	Wire Harness Power Supply Cord		3A9838-02	2	2	2						
14	Connector Cap		4A6229-01	4	4	4						
15	Power Supply Cord		4A5379-01	1	1	1						
16	Air Distribution Top		1A3951-01	2	2	2						
17	Air Distribution Channel		1A4930-01	2	2	2						
18	Horizontal Thermal Breaker Cover	561 mm	2A8795-01	4	4	4						
19	Vertical Thermal Breaker Cover	1552 mm	2A8796-01	4	4	4						
20	Pilaster		3A0145-01	8	8	8						
21	LED Driver		3A9867-01	2	2	2						
22	LED Lamp		3A9788-01	2	2	2						
23	Bushing		425307-02	2	2	2						
24	LED Clip		4A5906-01	4	4	4						

B. Refrigeration Circuit
DT1A-HS
H-5 to R-5

Refrigerator

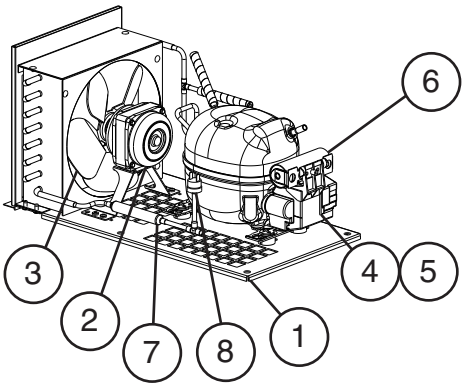

Freezer

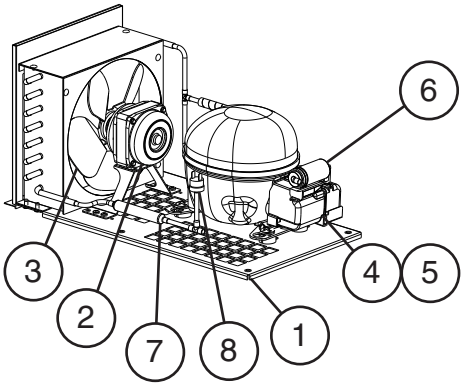

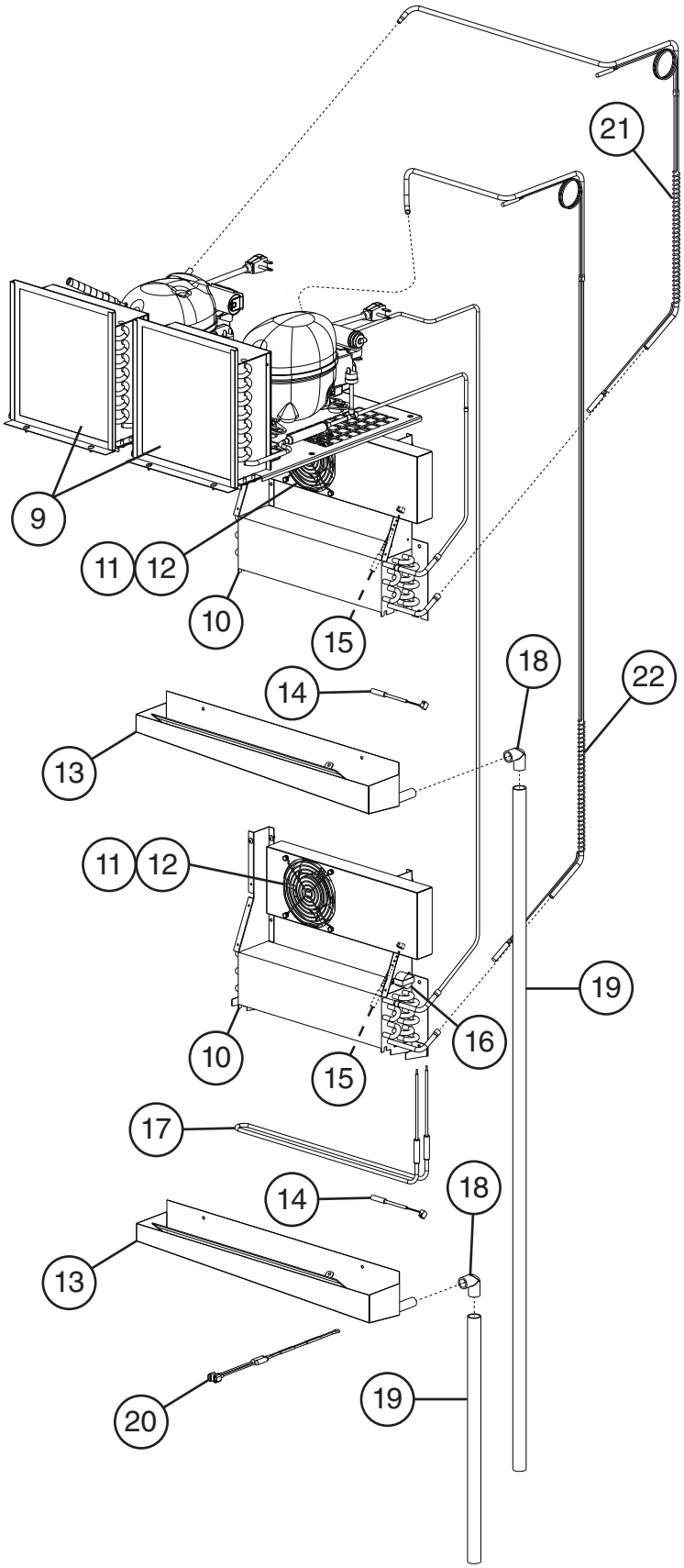

Title: B. Refrigeration Circuit Model: DT1A-HS												
				Required Number								
Index No.	Description	Material or Model Number	Part Number	H-5 to N-5 (L)	N-5 (M) to P-5 (D)	P-5 (E) to R-6 (C)	R-6 (D)					
1	Condensing Unit (includes compressor, condenser, and items 2 through 7, compressor and condenser are not sold individually)	**Refrigerator**	3A9520-01	1	1	1	-					
			3B0589-01				1					
		Freezer	3A9316-01	1	1	1	-					
			3B0453-01				1					
2	Condenser Fan Motor		3A6798-01	2	2	2	2					
3	Condenser Fan Blade		3A6799-01	2	2	2	2					
4	External Protector	**Refrigerator**	3A9522-01	1	1	1	1					
		Freezer	3A9475-01	1	1	1	1					
5	Start Relay	**Refrigerator**	3A9523-01	1	1	1	1					
		Freezer	3A9476-01	1	1	1	1					
6	Start Capacitor	**Refrigerator** 145-175MFD, 250VAC	3A9524-01	1	1	1	1					
	Run Capacitor	**Freezer** 12MFD, 250VAC	3A9477-01	1	1	1	1					
7	Drier		4A5576-01	2	2	2	2					
8	High-Pressure Switch		4A6039-01	2	2	2	-					
9	Air Filter		4A6189-01	2	2	2	2					
10	Evaporator		2A8513-01	2	2	2	2					
11	Evaporator Fan Motor		4A6192-01	2	2	2	2					
12	Evaporator Fan Guard		4A5831-01	2	2	2	2					
13	Evaporator Drain Pan		2A9347G01	2	2	2	2					
14	Cabinet Thermistor		4A4864-03	2	2	2	2					
15	Defrost Thermistor		4A4865-04	2	2	2	2					
16	Defrost Thermostat	**Freezer**	4A0954-02	1	-							
			4A6194-01		1	1	1					
17	Defrost Heater	**Freezer**	3A6443-05	1	1	-						
			3B1555-01			1	-					
			2B0861-01				1					
18	Drain Elbow		433467-01	2	2	2	2					
19	Drain Hose	1750 mm	7725B1923	1	1	1	1					
20	Drain Tube Heater	**Freezer**	4A6197-01	1	1	1	1					
21	Heat Exchanger	**Refrigerator**	3B0879G01	1	1	-						
			3B1778G01			1	-					
			2B1798G01				1					
22	Heat Exchanger	**Freezer**	3A9986G01	1	1	-						
			3B1779G01			1	-					
			2B1799G01				1					

B. Refrigeration Circuit
DT2A-FS

J-5 to R-5

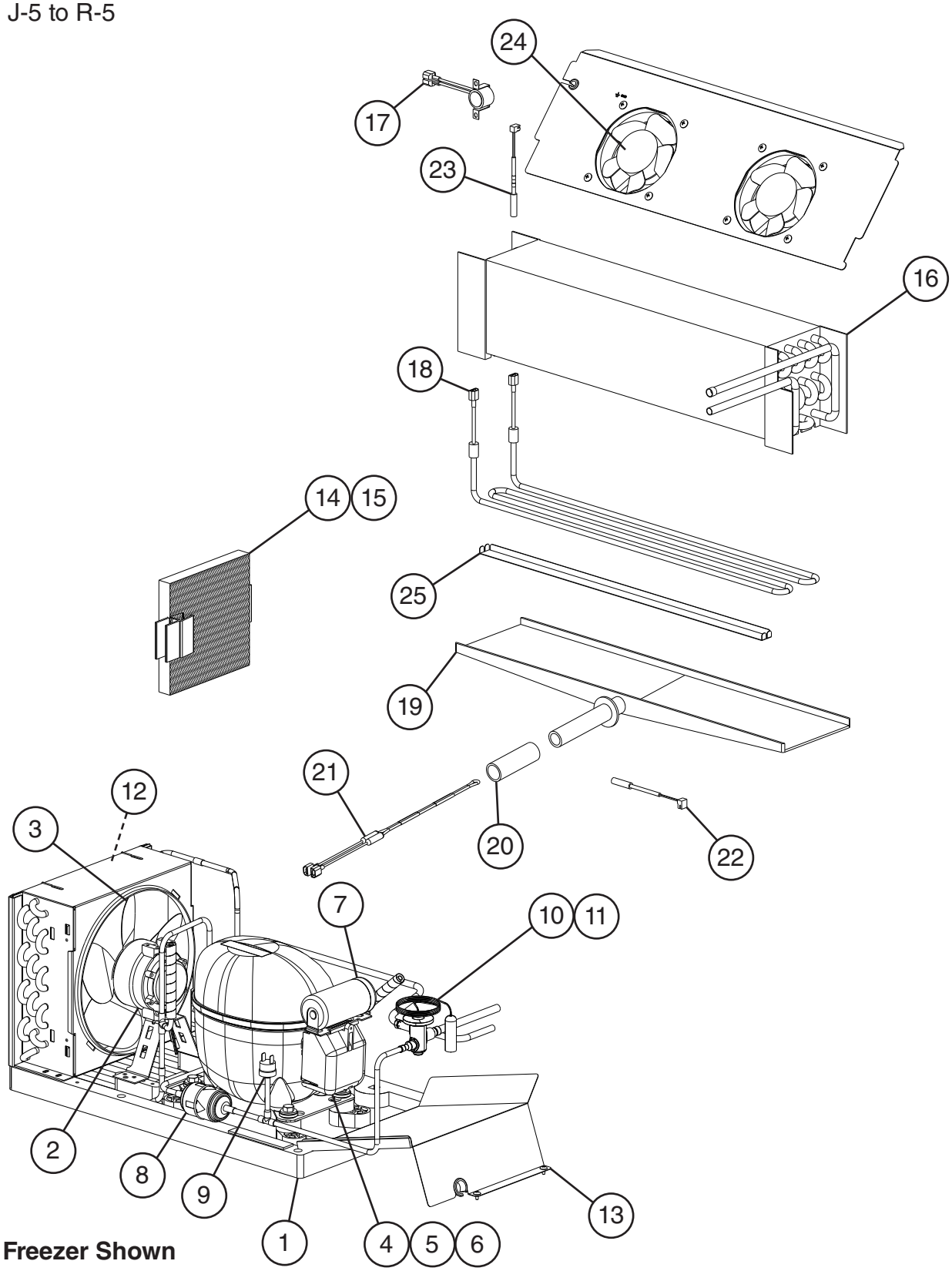

Freezer Shown

Title: B. Refrigeration Circuit Model: DT2A-FS												
				Required Number								
Index No.	Description	Material or Model Number	Part Number	J-5 to L-5	M-5 to P-6 (H)	P-6 (J) to Q-5 (D)	Q-6 (E) to R-5					
1	Condensing Unit (includes compressor, condenser, and items 2 through 8, compressor and condenser are not sold individually)	**Refrigerator**	2A8791-01	1	1	1	1					
		Freezer	2A8792-01	1	1	1	1					
2	Condenser Fan Motor		4A6376-01	2	2	2	2					
3	Condenser Fan Blade		4A6377-01	2	2	2	2					
4	External Protector	**Refrigerator**	4A6927-01	1	1	1	1					
		Freezer	4A6389-01	1	1	1	1					
5	Start Relay	**Refrigerator**	4A6383-01	1	1	1	1					
		Freezer	4A6385-01	1	1	1	1					
6	Condensing Unit Power Supply Cord	**Refrigerator**	4A6501-01	1	1	1	1					
		Freezer	4A6502-01	1	1	1	1					
7	Start Capacitor	**Refrigerator**	4A6378-01	1	1	1	1					
		Freezer	4A6380-01	1	1	1	1					
8	Drier		4A1113-01	2	2	2	2					
9	High-Pressure Switch		4A6039-01	2	2	2	2					
10	Thermostatic Expansion Valve	**Refrigerator**	4A6816-01	1	1	-						
			4A7211-01			1	-					
			4A7212-01				1					
		Freezer	4A7210-01	1	1	1	1					
11	Thermostatic Expansion Valve Cover		4A6201-01	2	2	2	2					
12	Air Filter		4A6189-01	2	2	2	2					
13	Deflector		2A9004-01	2	2	2	2					
14	Wick	**Refrigerator**	4A6188-01	1	1	1	1					
15	Wick Retainer	**Refrigerator**	4A6164-01	2	2	2	2					
16	Evaporator		2A9932-01	2	2	2	2					
17	Defrost Thermostat	**Freezer** (4A8028-01 Alternate)	4A6194-01	1	1	1	1					
18	Defrost Heater	**Freezer**	3A9800-01	1	1	1	1					
19	Evaporator Drain Pan		1A4805-01	2	2	2	2					
20	Drain Hose	76mm	7716-2025	2	-							
			7716B2025		2	2	2					
21	Drain Tube Heater	**Freezer**	4A6197-01	1	1	1	1					
22	Cabinet Thermistor		4A4864-02	2	2	2	2					
23	Defrost Thermistor	**Freezer**	4A4865-02	2	2							
24	Evaporator Fan Motor		4A6192-01	4	4							
25	Evaporator Block	**Freezer**	3B0068-01	1	1							

C. Door-Half Solid Right Hinged 1/2

H-5 to R-6

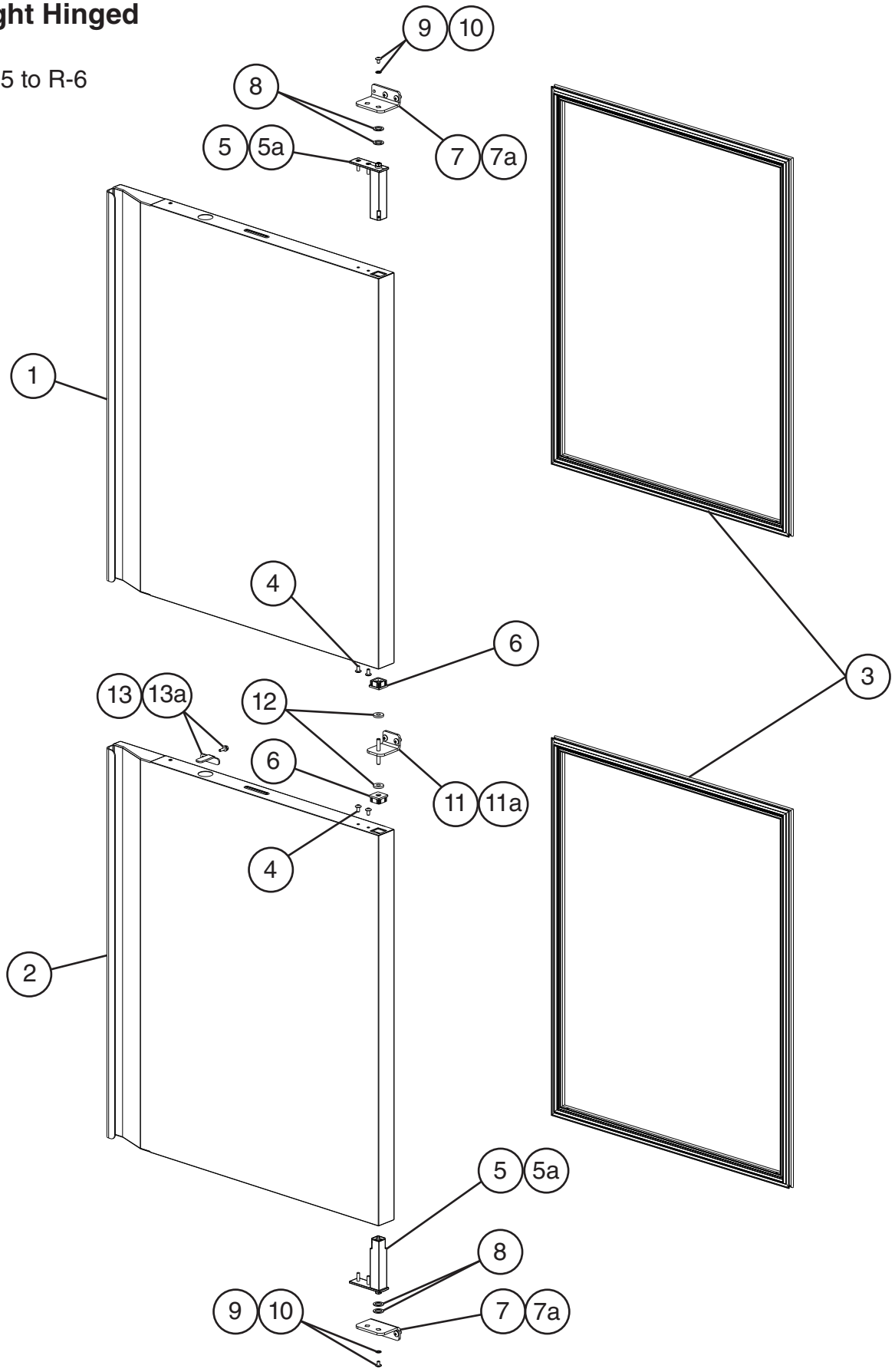

C. Door-Half Solid
Left Hinged
2/2

H-5 to R-6

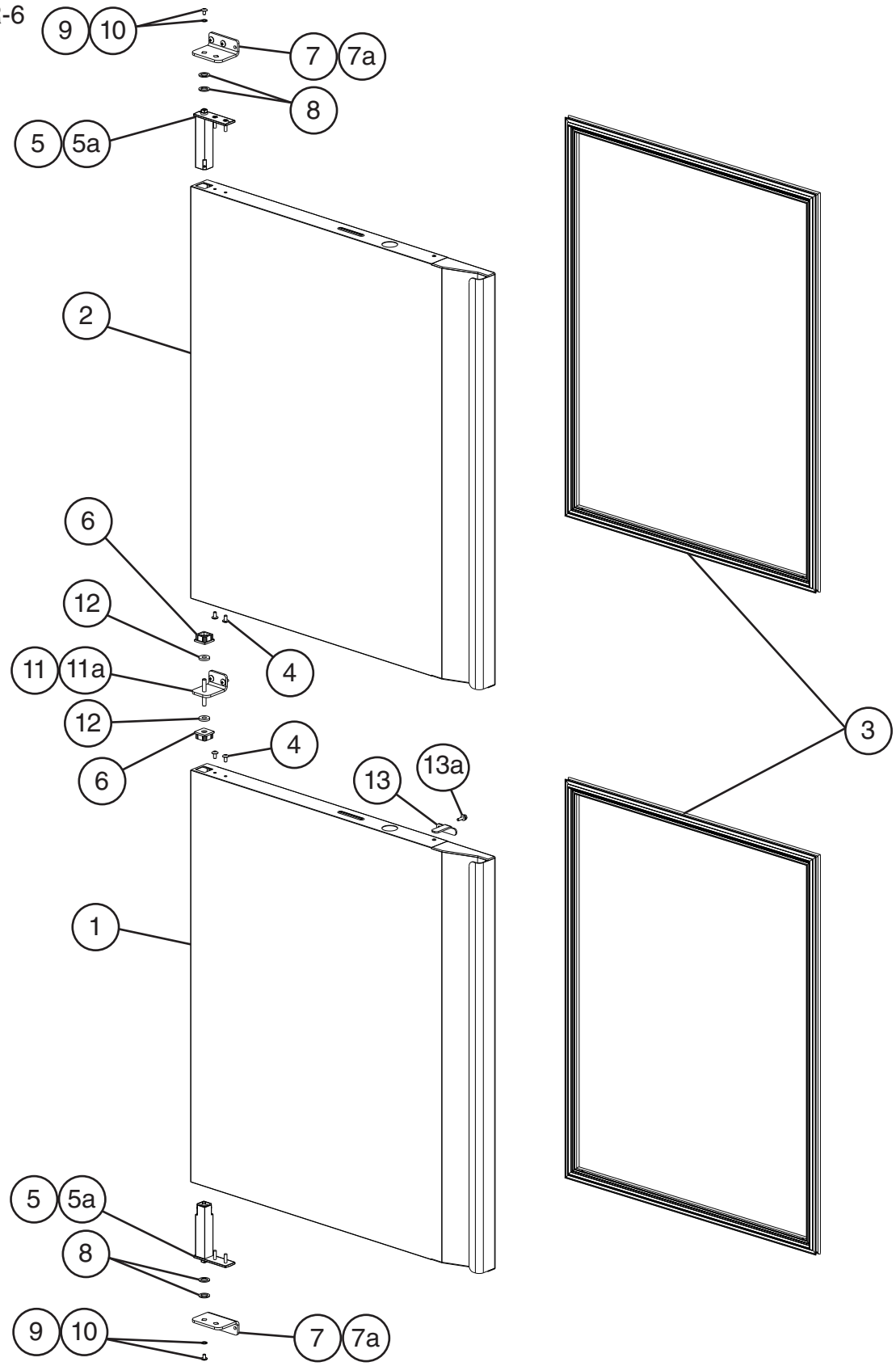

Title: C. Door-Half Solid Model: Half Solid												
				Required Number								
Index No.	Description	Material or Model Number	Part Number	H-5 to N-7	N-8 to R-6							
1	Upper Right/Lower Left Door Assembly (includes half the quantity of items 3 through 6)		2A7837G01	1	1							
2	Lower Right/Upper Left Door Assembly (includes half the quantity of items 3 through 6)		2A7838G01	1	1							
3	Gasket		2A5192-24	2	2							
4	Truss Head Screw (Filler Screw)	5×10, SS	7C32-0510	4	4							
5	Spring Cartridge		3A9206-01	2	2							
5a	Spring Cartridge Screw	5×20, SS	7C42-0520	4	4							
6	Nylon Bearing		4A5232-01	2	2							
7	Upper/Lower Hinge Bracket		3A9689-01	2	2							
7a	Truss Head Screw	5×12, SS	7C32-0512	4	4							
8	Thrust Washer		4A5233-01	4	4							
9	Lock Washer		4A5231-01	2	2							
10	Screw		4A5230-01	2	2							
11	Middle Hinge Bracket		3A9767G01	1	1							
11a	Truss Head Screw	5×12, SS	7C32-0512	2	2							
12	Thrust Washer		4A5234-01	2	2							
13	Half-Door Lock		4A5249-01	1	1							
13a	Bolt		449879-08	1	-							
			7B0230516		1							

D. Door-Full Solid Right Hinged 1/2

H-5 to R-5

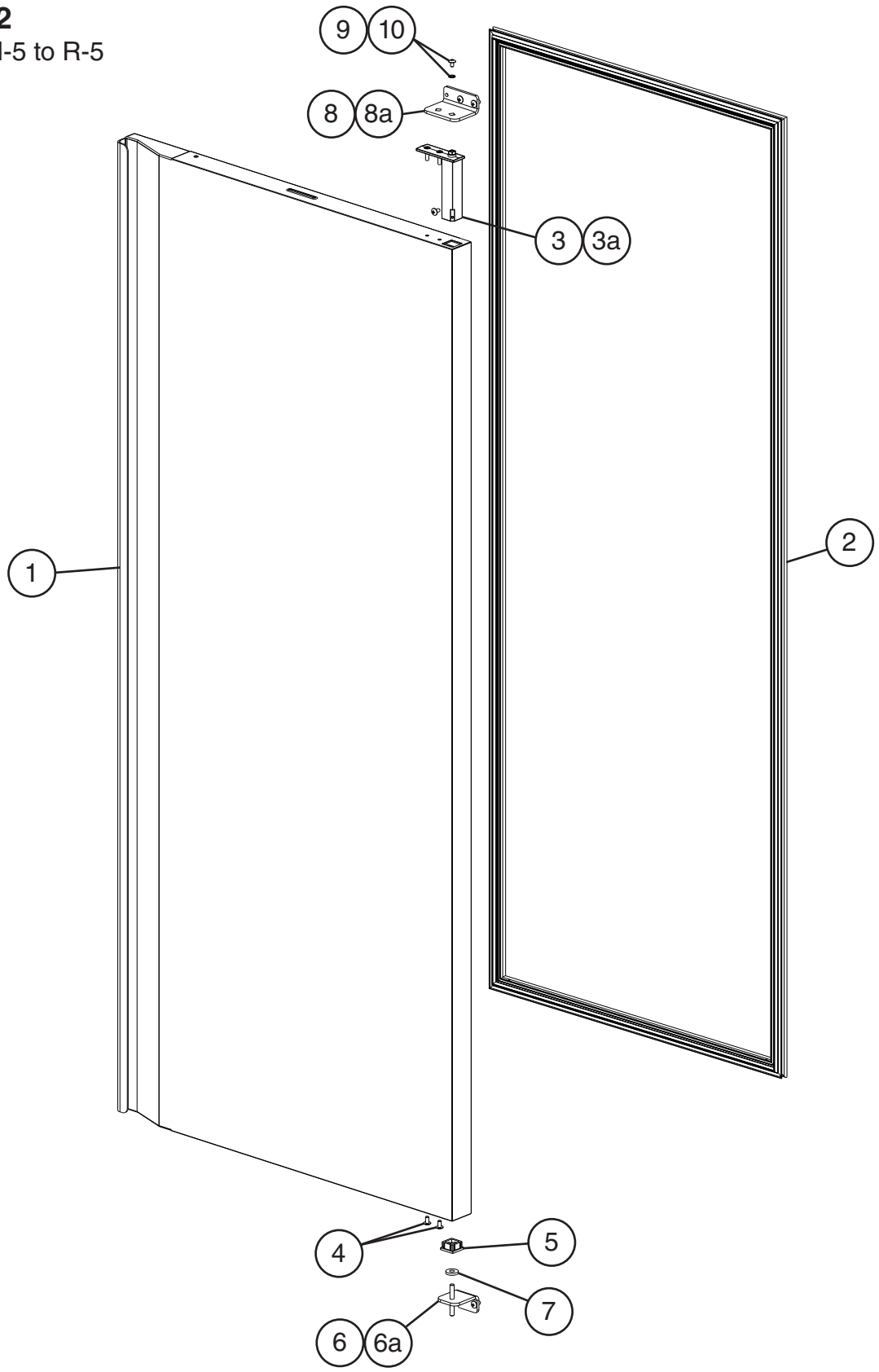

D. Door-Full Solid
Left Hinged
2/2

H-5 to R-5

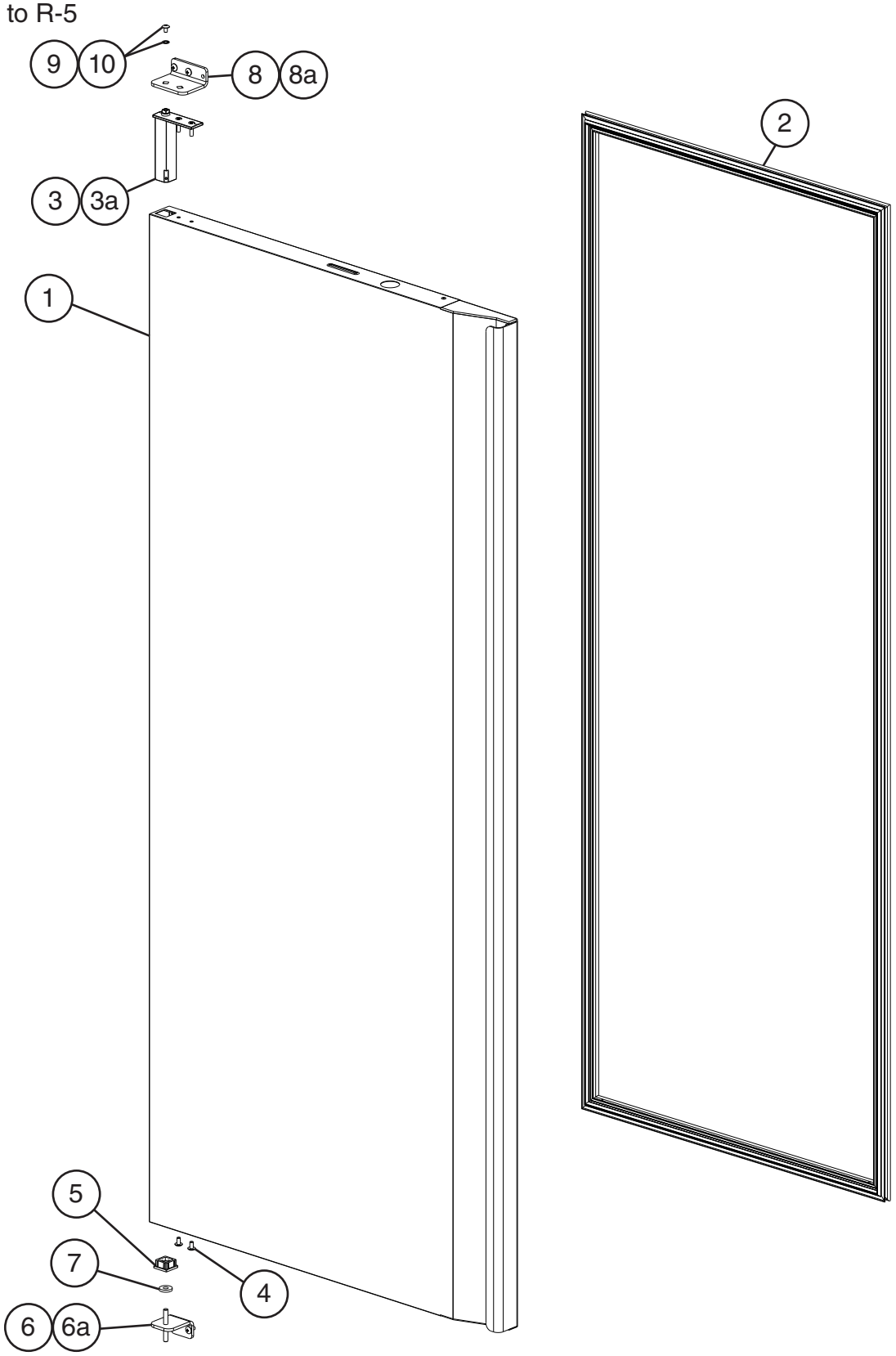

Title: D. Door-Full Solid Model: Full Solid												
Index No.	Description	Material or Model Number	Part Number	Required Number								
				H-5 to R-5								
1	Right Door Assembly (includes items 2 through 5)		2A7814G01	1								
	Left Door Assembly (includes items 2 through 5)		2A7817G01	1								
2	Gasket		2A5192-07	1								
3	Spring Cartridge		3A9206-01	1								
3a	Spring Cartridge Screw	5×20, SS	7C42-0520	2								
4	Truss Head Screw (Filler Screw)	5×10, SS	7C32-0510	2								
5	Nylon Bearing		4A5232-01	1								
6	Lower Hinge Bracket		3A9767G01	1								
6a	Truss Head Screw	5×12, SS	7C32-0512	2								
7	Thrust Washer		4A5234-01	1								
8	Upper Hinge Bracket		3A9689-01	1								
8a	Truss Head Screw	5×12, SS	7C32-0512	2								
9	Upper Hinge Bracket Washer		4A5231-01	1								
10	Upper Hinge Bracket Screw		4A5230-01	1								

E. Accessories & Labels
DT1A-HS, DT2A-FS
H-5 to R-6

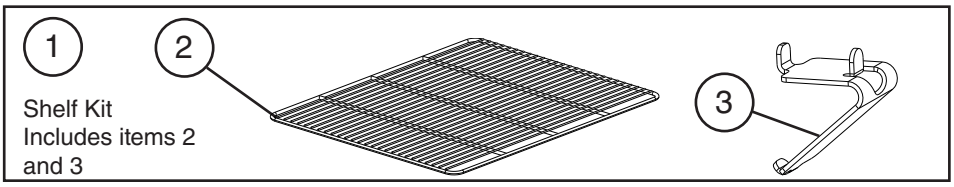

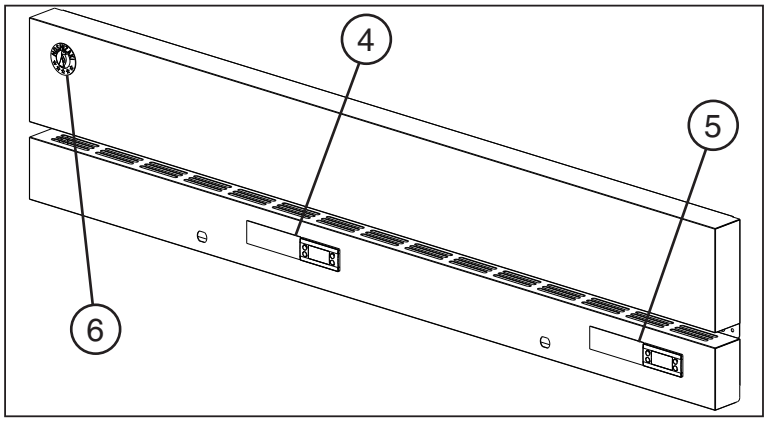

Stem Caster

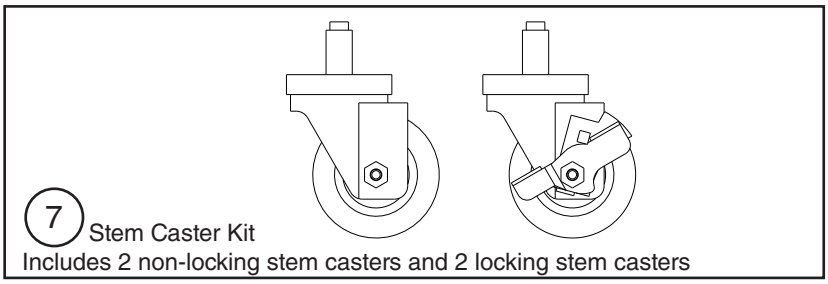

Stem Caster Shim

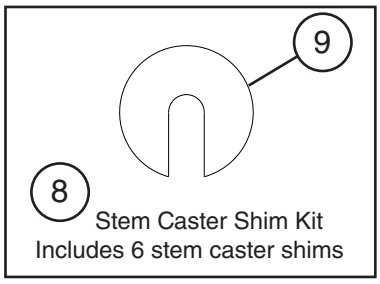

Title: E. Accessories & Labels Model: DT1A-HS, DT2A-FS												
				Required Number								
Index No.	Description	Material or Model Number	Part Number	H-5 to R-6								
1	Shelf Kit (3 Pack) (one kit includes half of items 2 and 3)		3A6902A01 (HS-5053)	2								
2	Shelf		3A6876-03 (HS-5052)	6								
3	Shelf Clip		428957-01	24								
4	Hoshizaki Label	**Refrigerator**	3B0043-01	1								
5		**Freezer**	3B0043-02	1								
6	Penguin Label		475552L02	1								
Stem Caster												
7	4-inch Stem Caster Pack (includes 1 locking caster and 1 non-locking caster)	(HS-3546)	4A1347-03	2								
8	Stem Caster Shim Kit (includes item 13)		HS-3590	1								
9	Stem Caster Shim		4A3658-01	6								