HOSHIZAKI

Service Manual

Steelheart Series
Refrigerated Kitchen Equipment

Models
Upright A-Series

All Refrigerators
All F3A-xx
F1A-xxx Auxiliary Code Q-6 and Earlier
F2A-xxxx Auxiliary Code Q-7 and Earlier
PTF1A-xxx-xxx Auxiliary Code Q-5

hoshizakiamerica.com

Number: 73237
Issued: 2-25-2019
Revised: 7-14-2026

⚠ WARNING

Only qualified service technicians should install and service the appliance. To obtain the name and phone number of your local Hoshizaki Certified Service Representative, visit www.hoshizakiamerica.com. No service should be undertaken until the technician has thoroughly read this Service Manual. Failure to service and maintain the appliance in accordance with this manual will adversely affect safety, performance, component life, and warranty coverage. Proper installation is the responsibility of the installer. Product failure or property damage due to improper installation is not covered under warranty.

Hoshizaki provides this manual primarily to assist qualified service technicians in the service and maintenance of the appliance.

Should the reader have any questions or concerns which have not been satisfactorily addressed, please call, send an e-mail message, or write to the Hoshizaki Technical Support Department for assistance.

Phone: 1-800-233-1940; (770) 487-2331

E-mail: tech-support@hoshizaki.com

HOSHIZAKI AMERICA, INC.

618 Highway 74 South
Peachtree City, GA 30269
Attn: Hoshizaki Technical Support Department

NOTE: To expedite assistance, all correspondence/communication MUST include the following information:

- Model Number _____
- Serial Number _____
- Complete and detailed explanation of the problem.

IMPORTANT
This manual should be read carefully before the appliance is serviced. Read the warnings and guidelines contained in this manual carefully as they provide essential information for the continued safe use, service, and maintenance of the appliance. Retain this manual for any further reference that may be necessary.

CONTENTS

Important Safety Information 5
I. General Information 11
A. Construction 11
B. Refrigeration Circuit Diagram 13
II. Sequence of Operation 14
A. Sequence of Operation Flow Charts 14
1. Refrigerator 14
2. Freezer 15
III. Service Diagnosis, Refrigeration Circuit Service, and Component Service 16
A. Safety Precautions When Servicing | Précautions à prendre lors de l'entretien 16
1. English 16
2. Français 21
B. Service Diagnosis 26
1. Refrigerator 28
2. Freezer 32
C. Control Module Check 36
D. Thermistor Check 38
E. Diagnostic Tables 39
F. Controls and Adjustments 41
G. Temperature 43
H. Defrost 44
I. Alarm Safeties 45
J. Safety Devices and Light Control 46
K. Mullion/Perimeter Heater 46
IV. Refrigeration Circuit and Component Service Information 47
A. Refrigeration Circuit Service Information 49
B. Component Service Information 54
C. Door Reversal 55
V. Maintenance 56
VI. Preparing the Appliance for Periods of Non-Use 57
VII. Decommissioning and Disposal 58

VIII. Technical Information 62
A. Electrical and Refrigerant Data 62
B. Wiring Diagrams 65
1. R1A/R2A/F1A-FG/FGE/FGCL/FGCR/FS/FSJ/FSL/FSLJ/HG/HGE/HS/HSL, PT1A-FG-FG/FGE-FGE/FS-FS/HS-HS 65
2. PTF1A-FGE-FGE/-HS-HS 66
3. RN1A-FS, RT1A-FS-FS 67
4. RN2A-FS, RT2A-FS-FS 68
5. PT2A-FG-FG/FGE-FGE/FS-FS/HS-HS 69
6. R3A-FG/FGE/FGCL/FGCR/FS/FSCL/FSCR/HS/HG/HGE 70
7. F2A-FG/FGE/FS/HG/HGE/HS 71
8. F3A-FS/HS 72
9. DT1A-HS 73
10. DT2A-FS/HS 74

Important Safety Information

Throughout this manual, notices appear to bring your attention to situations which could result in death, serious injury, damage to the appliance, or damage to property.

	R-290 Class A3 Flammable Refrigerant Used
⚠ DANGER	**Indicates a hazardous situation that, if not avoided, will result in death or serious injury.**
⚠ WARNING	**Indicates a hazardous situation that, if not avoided, could result in death or serious injury.**
NOTICE	**Indicates a situation that, if not avoided, could result in damage to the appliance or property.**
IMPORTANT	**Indicates important information about the use and care of the appliance.**

⚠ DANGER

Risk of Fire or Explosion
Flammable Refrigerant Used

- Only qualified service technicians should install and service the appliance. Qualified service technicians are those having the appropriate technical training and experience necessary to be aware of hazards to which they are exposed in performing a task and of measures necessary to minimize the danger to themselves or other persons.
- No service should be undertaken until the technician has thoroughly read this Service Manual. All safety precautions must be followed.
- This appliance to be installed in accordance with the Safety Standard for Refrigeration Systems ANSI/ASHRAE 15.
- Follow handling instructions carefully in compliance with national regulations.
- Do not use mechanical devices or other means to accelerate the defrosting process or to clean, other than those recommended by the manufacturer.
- Do not puncture refrigerant tubing. Risk of fire or explosion due to puncture of refrigerant tubing; follow handling instructions carefully.
- Servicing shall be done by trained service personnel with certified competence in handling flammable refrigerants to minimize the risk of possible ignition due to incorrect parts or improper service.
- Component parts shall be replaced with like components so as to minimize the risk of possible ignition due to incorrect parts.
- Dispose of properly in accordance with federal or local regulations.
- Do not pierce or burn.
- Be aware that refrigerants may not contain an odor.
- Do not damage the refrigeration circuit.
- See nameplate for R-290 refrigerant charge:
  - If greater than 114 g (4 oz.), do not install in public corridor or lobby.
  - If greater than 152 g (5.3 oz.), do not install within 6 m (20 ft) of open flame.
- The appliance shall be stored in a room without continuously operating ignition sources (for example: open flames, an operating gas appliance, or an operating electric heater).

⚠ DANGER continued

- Do not place any potential ignition sources in or near the appliance.
- Keep clear of obstruction all ventilation openings in the appliance enclosure or in the structure for building-in.
- No potential sources of ignition are to be used in the searching for or detection of refrigerant leaks.
- Do not use electrical appliances inside the appliance unless they are of the type recommended by the manufacturer.
- Do not store explosive substances such as aerosol cans with a flammable propellant in this appliance.
- Check that cabling will not be subject to wear, corrosion, excessive pressure, vibration, sharp edges, or any other adverse environmental effects. The check shall also take into account the effects of aging or continual vibration from sources such as compressors or fans.
- Ensure that the area is in the open or that it is adequately ventilated before breaking into the system or conducting any hot work. A degree of ventilation shall continue during the period that the work is carried out. The ventilation should safely disperse any released refrigerant and preferably expel it externally into the atmosphere.

Risque D'Incendie ou D'Explosion Fluide Frigorigène Inflammable Utilisé

- Seuls des techniciens de service qualifiés doivent installer et entretenir l'appareil. Les techniciens de service qualifiés sont ceux qui possèdent la formation technique et l'expérience nécessaires pour être conscients des dangers auxquels ils sont exposés dans l'accomplissement d'une tâche et des mesures nécessaires pour réduire au minimum le danger pour eux-mêmes ou pour d'autres personnes.
- Aucune opération d'entretien ne doit être entreprise avant que le technicien n'ait lu attentivement ce manuel. Toutes les précautions de sécurité doivent être suivies.
- Cet appareil doit être installé conformément à la norme de sécurité pour les systèmes de réfrigération ANSI/ASHRAE 15.
- Suivez attentivement les instructions de manutention conformément aux réglements nationaux.
- Ne pas utiliser de dispositifs mécaniques ou d'autres moyens pour accélérer le processus de dégivrage ou pour nettoyer, autres que ceux recommandés par le fabricant.
- Ne pas perforer la conduite de fluide frigorigène. Risque d'incendie ou d'explosion en cas de perforation d'une canalisation de fluide frigorigène; suivez attentivement les instructions de manutention.
- L'entretien doit être effectué par du personnel formé et certifié pour la manipulation de réfrigérants inflammables afin de réduire au minimum le risque d'inflammation dû à des pièces incorrectes ou à un entretien inadéquat.
- Les pièces doivent être remplacées par des pièces similaires, de manière à réduire au minimum le risque d'inflammation dû à des pièces incorrectes.

⚠ DANGER Continué

- Mettre au rebut conformément aux réglements fédéraux ou locaux.
- Ne pas percer ou brûler.
- Attention, les fluides frigorigénes peuvent ne pas dégager d'odeur.
- Ne pas endommager les composants du circuit de réfrigération.
- Voir plaque signalétique pour la charge de réfrigérant R-290:
  - Si elle est supérieure à 114 g (4 oz.), ne pas l'installer dans un couloir public ou un hall d'entrée.
  - Si elle est supérieure à 152 g (5.3 oz.), ne pas l'installer à moins de 6 m (20 pi) d'une flamme nue.
- L'appareil doit être entreposé dans un local ne contenant pas de sources d'inflammation permanentes (flammes nues, appareil à gaz ou dispositif de chauffage électrique en fonctionnement, par exemple).
- Ne placer aucune source d'inflammation potentielle à l'intérieur ou à proximité de l'appareil.
- Ne pas obstruer les ouvertures de ventilation dans l'enceinte de l'appareil ou dans la structure d'encastrement.
- Aucune source potentielle d'inflammation ne doit être utilisée pour rechercher ou détecter des fuites de réfrigérant.
- Ne pas utiliser d'appareils électriques à l'intérieur de l'appareil, sauf s'ils sont du type recommandé par le fabricant.
- Ne pas entreposer dans cet appareil des substances explosives telles que des bombes aérosols contenant un gaz propulseur inflammable.
- Vérifier que le câblage ne sera pas soumis à l'usure, à la corrosion, à une pression excessive, à des vibrations, à des arêtes vives ou à tout autre effet environnemental négatif. Le contrôle doit également prendre en compte les effets du vieillissement ou des vibrations continues provenant de sources telles que les compresseurs ou les ventilateurs.
- S'assurer que la zone est à l'air libre ou qu'elle est correctement ventilée avant de pénétrer dans le système ou d'effectuer un travail à chaud. Une certaine ventilation doit être maintenue pendant la durée des travaux. La ventilation doit permettre de disperser en toute sécurité tout réfrigérant libéré et, de préférence, de l'expulser dans l'atmosphère.

⚠ WARNING

The appliance should be destined only to the use for which it has been expressly conceived. Any other use should be considered improper and therefore dangerous. The manufacturer cannot be held responsible for injury or damage resulting from improper, incorrect, and unreasonable use. Failure to service and maintain the appliance in accordance with this manual will adversely affect safety, performance, component life, and warranty coverage and may result in costly water damage.

To reduce the risk of death, electric shock, serious injury, or fire, follow basic precautions including the following:

- This appliance is not intended for use above 2,000 m (6,561 ft). Installation above 2,000 m (6,561 ft) may adversely affect safety, performance, and component life.
- Wear appropriate personal protective equipment (PPE) when servicing the appliance.
- The appliance must be installed in accordance with applicable national, state, and local codes and regulations. Failure to meet these code requirements could result in death, electric shock, serious injury, fire, or damage.
- The appliance requires an independent power supply of proper capacity. See the nameplate for electrical specifications. Failure to use an independent power supply of proper capacity can result in a tripped breaker, blown fuse, damage to existing wiring, or component failure. This could lead to heat generation or fire.
- Do not make any alterations to the appliance. Alterations could result in electric shock, injury, fire, or damage to the appliance.
- **THE APPLIANCE MUST BE GROUNDED.** The appliance is equipped with a NEMA 5-15 three-prong grounding plug to reduce the risk of potential shock hazards. It must be plugged into a properly grounded, independent 3-prong wall outlet. If the outlet is a 2-prong outlet, it is your personal responsibility to have a qualified electrician replace it with a properly grounded, independent 3-prong wall outlet. Do not remove the ground prong from the power cord and do not use an adapter plug. Failure to follow these instructions may result in death, electric shock, or fire.
- To reduce the risk of electric shock, do not touch the control module or plug with damp hands.
- To reduce the risk of electric shock, make sure the control module is in the "OFF" position before plugging in or unplugging the appliance.
- Unplug the appliance before servicing.
- Do not use an appliance with a damaged power cord. The power cord should not be altered, jerked, bundled, weighed down, pinched, or tangled. Such actions could result in electric shock or fire. To unplug the appliance, be sure to pull the plug, not the cord, and do not jerk the cord.
- Do not use an extension cord.
- If the supply cord is damaged, it must be replaced by the manufacturer, its service agent, or similarly qualified persons in order to avoid a hazard. Upon replacement, the GREEN ground wire in the power cord must be connected to the designated grounding screw.
- Appliance is heavy. Use care when lifting or positioning. Work in pairs when needed to prevent injury or damage.

⚠ WARNING continued

- The appliance is not intended for use by persons (including children) with reduced physical, sensory, or mental capabilities, or lack of experience and knowledge, unless they have been given supervision or instruction concerning use of the appliance by a person responsible for their safety.
- Do not splash, pour, or spray water directly onto or into the appliance. This might cause short circuit, electric shock, corrosion, or failure.
- Children should be supervised to ensure that they do not play with the appliance.
- Do not climb, stand, or hang on the appliance or doors or allow children or animals to do so. Do not climb into the appliance or allow children or animals to do so. Death or serious injury could occur or the appliance could be damaged.
- Open and close the doors with care. Opening the doors too quickly or forcefully may cause injury or damage to the appliance or surrounding equipment.
- Be careful not to pinch fingers when opening and closing the doors.
  Be careful when opening and closing the doors when children are in the area.
- Do not use combustible spray or place volatile or flammable substances in or near the appliance. They might catch fire.
- Keep the area around the appliance clean. Dirt, dust, or insects in the appliance could cause harm to individuals or damage to the appliance.
- Do not throw anything onto the shelves or load any single shelf with more than 120 lb. (54.5 kg) of product. They might fall off and cause injury.
- The appliance is designed only for temporary storage of food. Employ sanitary methods. Use for any other purposes (for example, storage of chemicals or medical supplies such as vaccine and serum) could cause deterioration of stored items.
- Do not place any product on the floor of the cabinet. All product must be placed on properly installed shelves.
- Do not block air inlets or outlets, otherwise cooling performance may be reduced.
- Do not tightly pack the cabinet. Allow some space between items to ensure good air flow. Also allow space between items and interior surfaces.
- Do not put warm or hot foods in the cabinet. Let them cool first, or they will raise the cabinet temperature and could deteriorate other foods in the cabinet or overload the appliance.
- Food storage and handling must comply with applicable codes and regulations.
- All foods should be wrapped in plastic film or stored in sealed containers. Otherwise foods may dry up, pass their smells onto other foods, cause frost to develop, result in poor appliance performance, or increase the likelihood of cross-contamination. Certain dressings and food ingredients, if not stored in sealed containers, may accelerate corrosion of the evaporator, resulting in failure.
- Do not store items near air outlets. Otherwise, items may freeze up and crack or break causing a risk of injury or contamination of other food.

NOTICE
• Install the appliance in a location that stays above freezing. Normal operating ambient temperature must be within 45°F to 100°F (7°C to 38°C). • Do not leave the appliance on during extended periods of non-use, extended absences, or in sub-freezing temperatures. To properly prepare the appliance for these occasions, follow the instructions in "VI. Preparing the Appliance for Periods of Non-Use." • Keep ventilation openings, in the appliance enclosure or in the built-in structure, clear of obstruction. • Protect the floor when moving the appliance to prevent damage to the floor. • Do not allow the appliance to bear any outside weight. • To prevent deformation or cracks, do not spray insecticide onto the plastic parts or let them come into contact with oil. • To avoid damage to the gasket, use only the door handle when opening and closing

I. General Information

A. Construction

1. Solid Door Models

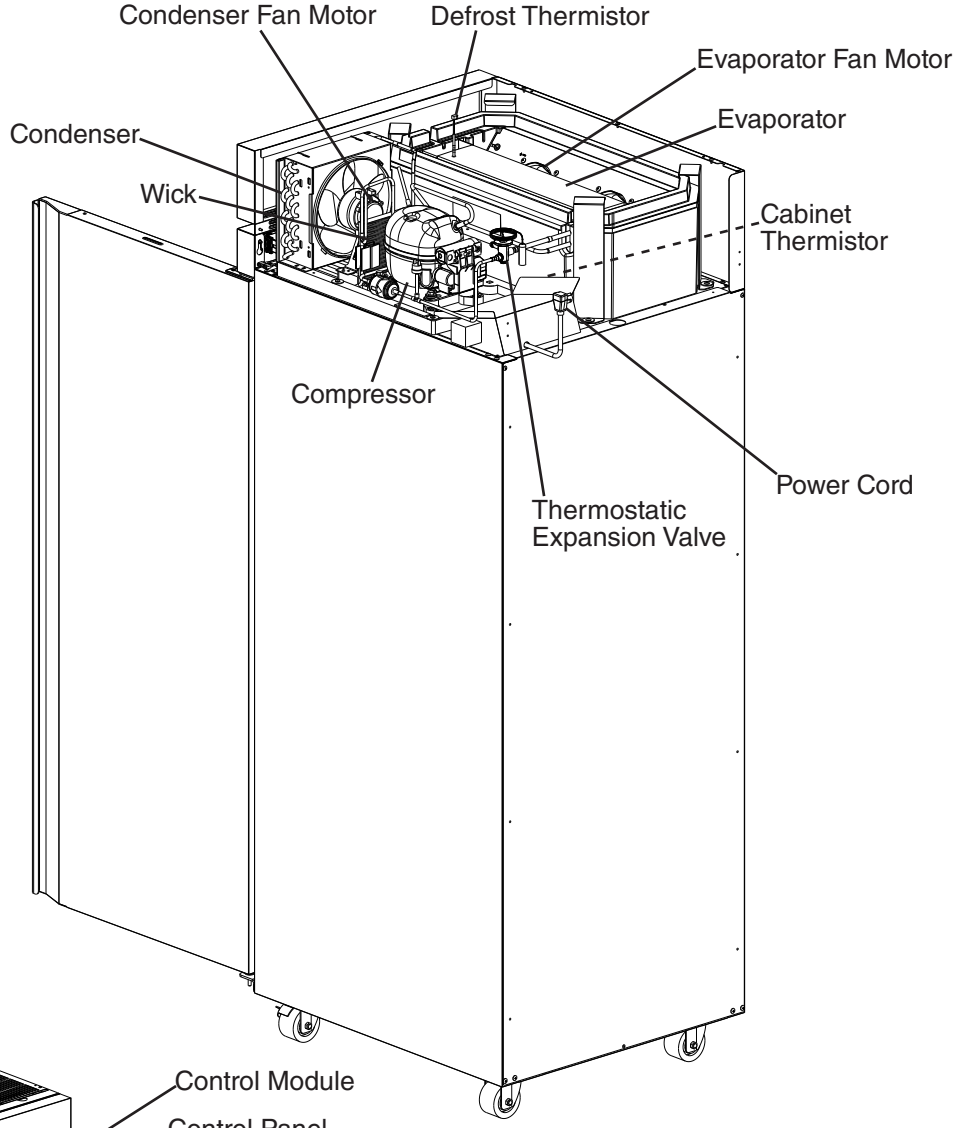

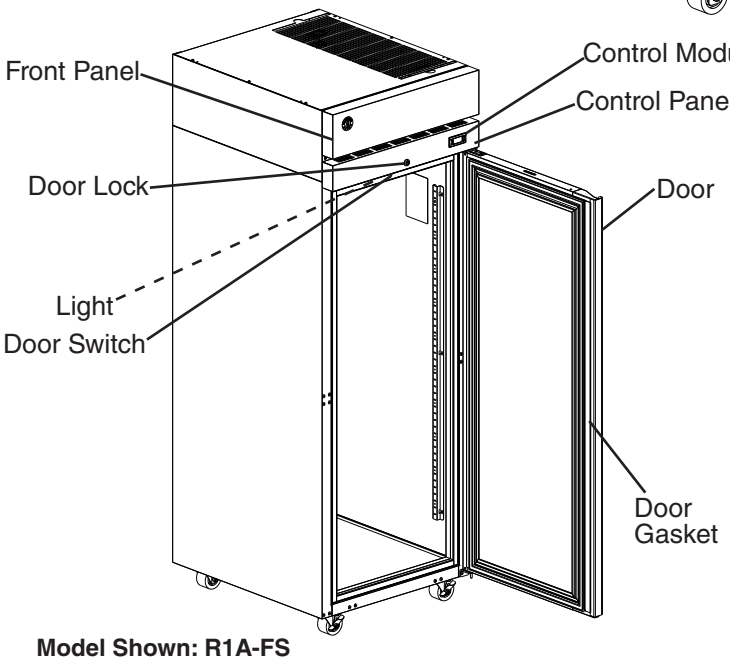

Model Shown: R1A-FS

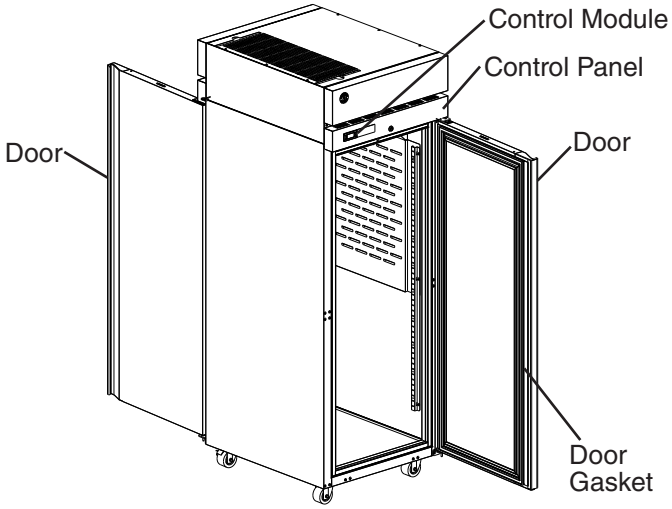

Model Shown: PT1A-FS-FS

2. Glass Door Models

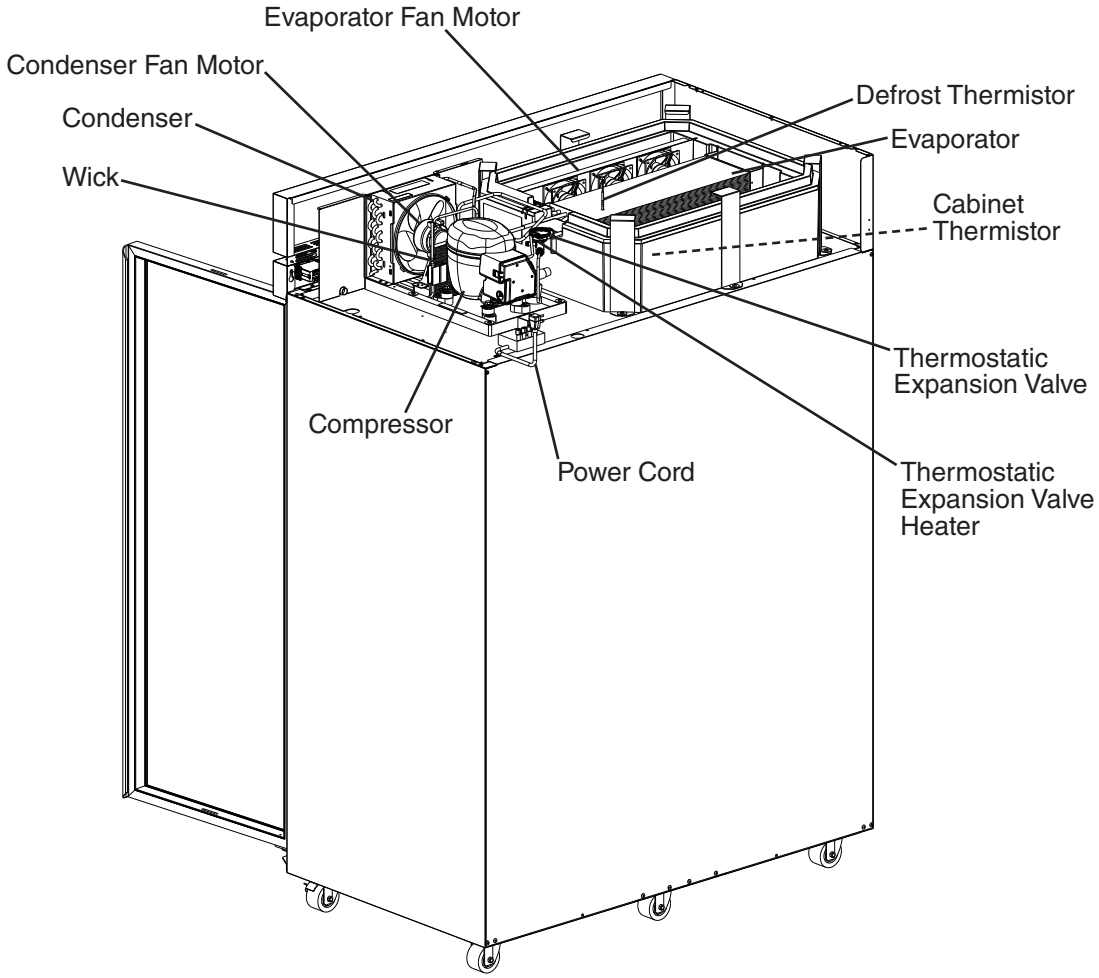

Model Shown: R2A-FG

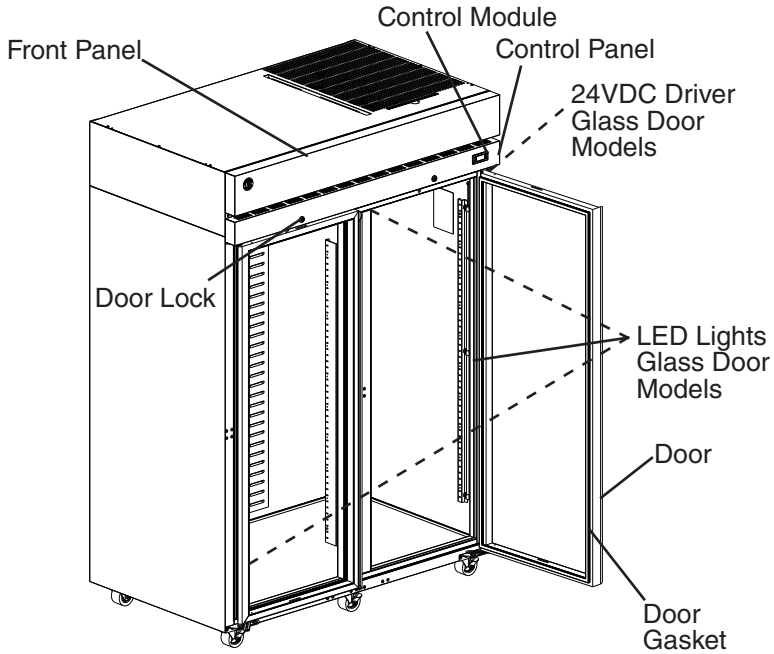

Model Shown: R2A-FG

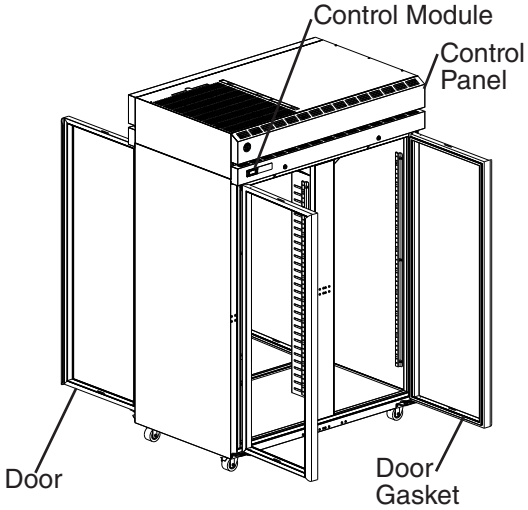

Model Shown: PT2A-FG-FG

B. Refrigeration Circuit Diagram

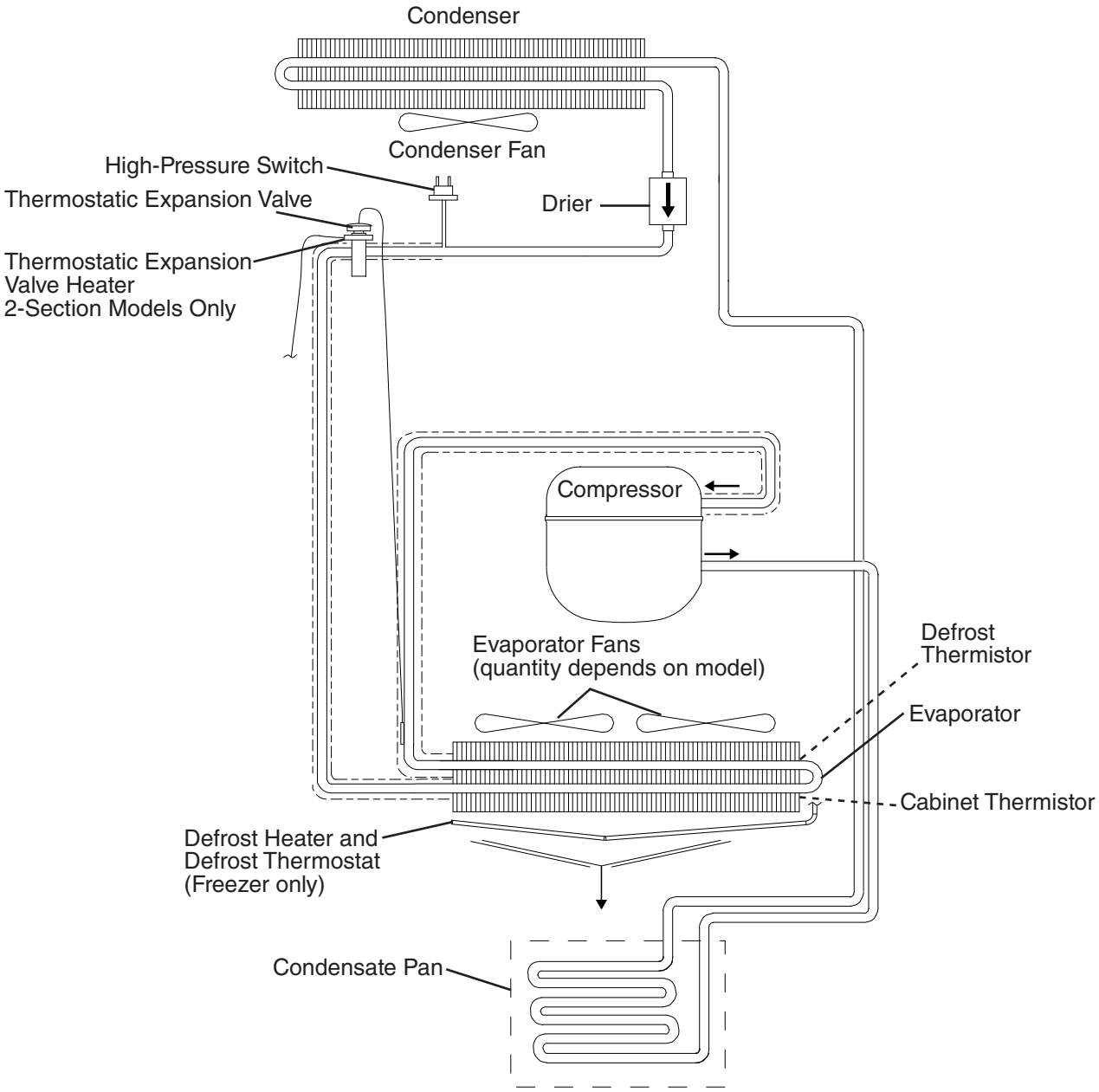

II. Sequence of Operation

A. Sequence of Operation Flow Charts

1. Refrigerator

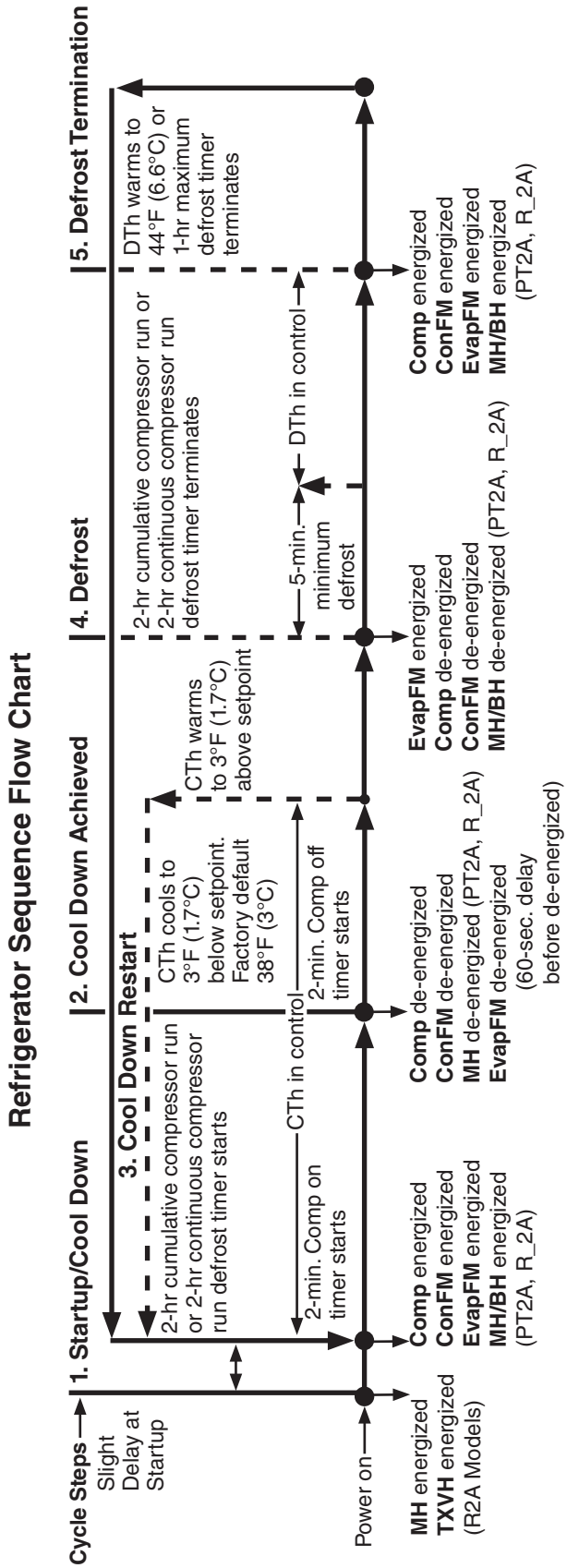

Legend:
BH-bottom heater
Comp-compressor
ConFM-condenser fan motor
CTh-cabinet thermistor
DTh-defrost thermistor
EvapFM-evaporator fan motor
MH-mullion heater
TXVH-thermostatic expansion valve heater

Note:
a) EvapFM delays energizing if DTh above 50°F (10°C).
b) EvapFM de-energizes when door is opened on -FS models and when upper door is opened on -HS models.
c) 2-min. minimum Comp on timer starts when Comp energizes.
d) 2-min. minimum Comp off timer starts when Comp de-energizes.
e) 5-min. minimum defrost time.
f) 1-hr. maximum defrost time.
g) "dEF" displayed during defrost.
h) 15-minute temperature delay timer starts when Comp/ConFM energize.
i) MH and BH de-energizes when Comp and CondFM de-energize on PT2A, RN2A, and RT2A models.

2. Freezer

Freezer Sequence Flow Chart

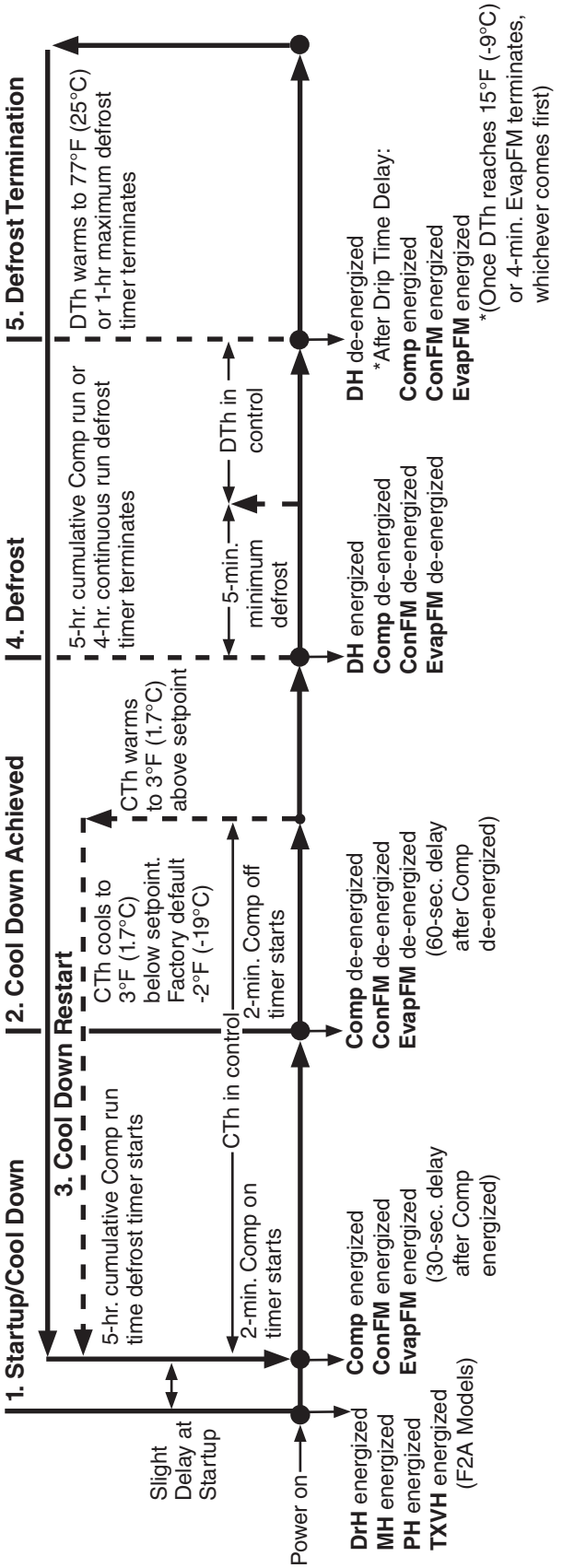

Legend:
Comp-compressor
ConFM-condenser fan motor
CTh-cabinet thermistor
DH-defrost heater
DrH-drain heater
DTh-defrost thermistor
EvapFM-evaporator fan motor
MH-mullion heater
PH-perimeter heater
TXVH-thermostatic expansion valve heater

Note: *Delays
a) EvapFM de-energizes when door is opened on -FS models and when upper door is opened on -HS models.
b) 2-min. minimum Comp on timer starts when Comp energizes.
c) 2-min. minimum Comp off timer starts when Comp de-energizes.
d) 5-min. minimum defrost time.
e) 1-hr. maximum defrost time.
f) "dEF" displayed during defrost.
g) 3-min. Comp/ConFM delay timer starts when defrost termination temperature is met.
h) 4-minute EvapFM delay timer starts when Comp/ConFM delay timer terminates
i) 15-minute temperature delay timer starts when EvapFM energizes

III. Service Diagnosis, Refrigeration Circuit Service, and Component Service

A. Safety Precautions When Servicing | Précautions à prendre lors de l'entretien

1. English

R-290 Class A3 Flammable Refrigerant Used

⚠ DANGER

Risk of Fire or Explosion. Flammable Refrigerant Used.

- Be sure to follow all Important Safety Information located at the beginning of this manual and in this section.
- The appliance should be diagnosed and repaired only by qualified service personnel to reduce the risk of death, electric shock, serious injury, or fire.
- Servicing shall be done by trained service personnel with certified competence in handling flammable refrigerants to minimize the risk of possible ignition due to incorrect parts or improper service.
- Follow handling instructions carefully in compliance with national regulations.
- Do not use mechanical devices or other means to accelerate the defrosting process or to clean, other than those recommended by the manufacturer.
- Be aware that refrigerants may not contain an odor.
- Do not puncture refrigerant tubing. Risk of fire or explosion due to puncture of refrigerant tubing; follow handling instructions carefully.
- Component parts shall be replaced with like components so as to minimize the risk of possible ignition due to incorrect parts.
- Do not place any potential ignition sources in or near the appliance.
- Prior to beginning work on systems containing flammable refrigerants, safety checks are necessary to ensure that the risk of ignition is minimized.
- All maintenance staff and others working in the local area shall be instructed on the nature of work being carried out. Work in confined spaces shall be avoided.
- Work shall be undertaken under a controlled procedure so as to minimize the risk of a flammable gas or vapor being present while the work is being performed.
- The area shall be checked with an appropriate refrigerant detector prior to and during work, to ensure the technician is aware of potentially toxic or flammable atmospheres.
- Ensure that the leak detection equipment being used is suitable for use with all applicable refrigerants, i.e., nonsparking, adequately sealed, or intrinsically safe. NOTE: The use of silicone sealant can inhibit the effectiveness of some types of leak detection equipment.
- Under no circumstances shall potential sources of ignition be used in the searching for or detection of refrigerant leaks. A halide torch (or any other detector using a naked flame) shall not be used.

⚠ DANGER continued

- The following leak detection methods are deemed acceptable for all refrigerant systems:
  - Electronic leak detectors may be used to detect refrigerant leaks but, in the case of flammable refrigerants, the sensitivity might not be adequate, or might need recalibration. (Detection equipment shall be calibrated in a refrigerant-free area.) Ensure that the detector is not a potential source of ignition and is suitable for the refrigerant used. Leak detection equipment shall be set at a percentage of the LFL of the refrigerant and shall be calibrated to the refrigerant employed, and the appropriate percentage of gas (25% maximum) is confirmed.
  - Leak detection fluids are also suitable for use with most refrigerants but the use of detergents containing chlorine shall be avoided as the chlorine can react with the refrigerant and corrode the copper pipe-work.

    Note: Examples of leak detection fluids are:
    - bubble method
    - fluorescent method agents
- If any hot work is to be conducted on the refrigerating equipment or any associated parts, appropriate fire extinguishing equipment shall be available on hand. A dry chemical or CO_2 fire extinguisher should be adjacent to the charging area. You must have a Class B chemical fire extinguisher available at all times.
- No person carrying out work in relation to a refrigerating system which involves exposing any pipe work shall use any sources of ignition in such a manner that it may lead to the risk of fire or explosion. All possible ignition sources, including cigarette smoking, should be kept sufficiently far away from the site of installation, repairing, removing, and disposal, during which refrigerant can possibly be released to the surrounding space. Prior to work taking place, the area around the equipment shall be surveyed to make sure that there are no flammable hazards or ignition risks. “No Smoking” signs shall be displayed.
- Ensure that the area is in the open or that it is adequately ventilated before breaking into the system or conducting any hot work. A degree of ventilation shall continue during the period that the work is carried out. The ventilation should safely disperse any released refrigerant and preferably expel it externally into the atmosphere.
- When breaking into the refrigerant circuit to make repairs – or for any other purpose – conventional procedures shall be used. However, for flammable refrigerants it is important that best practice be followed, since flammability is a consideration. The following procedure shall be adhered to:
  - safely remove refrigerant following local and national regulations
  - purge the circuit with inert gas
  - evacuate (optional for A2L)
  - purge with inert gas (optional for A2L)
  - open the circuit by cutting
- If a leak is suspected, all naked flames shall be removed/extinguished.
- If a leakage of refrigerant is found which requires brazing, all of the refrigerant shall be recovered from the system, or isolated (by means of shut off valves) in a part of the system remote from the leak.

⚠ DANGER continued

- When removing refrigerant from a system, either for servicing or decommissioning, it is recommended good practice that all refrigerants are removed safely.
- When transferring refrigerant into cylinders, ensure that only appropriate refrigerant recovery cylinders are employed. Ensure that the correct number of cylinders for holding the total system charge is available. All cylinders to be used are designated for the recovered refrigerant and labeled for that refrigerant (i.e., special cylinders for the recovery of refrigerant). Cylinders shall be complete with pressure-relief valve and associated shut-off valves in good working order. Empty recovery cylinders are evacuated and, if possible, cooled before recovery occurs.
- The recovery equipment shall be in good working order with a set of instructions concerning the equipment that is at hand and shall be suitable for the recovery of all appropriate refrigerants including, when applicable, flammable refrigerants. In addition, a set of calibrated weighing scales shall be available and in good working order. Hoses shall be complete with leak-free disconnect couplings and in good condition. Before using the recovery machine, check that it is in satisfactory working order, has been properly maintained and that any associated electrical components are sealed to prevent ignition in the event of a refrigerant release. Consult manufacturer if in doubt.
- The recovered refrigerant shall be returned to the refrigerant supplier in the correct recovery cylinder, and the relevant waste transfer note arranged. Do not mix refrigerants in recovery units and especially not in cylinders.
- If compressors or compressor oils are to be removed, ensure that they have been evacuated to an acceptable level to make certain that flammable refrigerant does not remain within the lubricant. The evacuation process shall be carried out prior to returning the compressor to the suppliers. Only electric heating to the compressor body shall be employed to accelerate this process. When oil is drained from a system, it shall be carried out safely.
- In addition to conventional charging procedures, the following requirements shall be followed:
  - Ensure that contamination of different refrigerants does not occur when using charging equipment. Hoses or lines shall be as short as possible to minimize the amount of refrigerant contained in them.
  - Cylinders shall be kept in an appropriate position according to the instructions.
  - Ensure that the refrigerating system is earthed (grounded) prior to charging the system with refrigerant.
  - Label the system when charging is complete (if not already).
  - Extreme care shall be taken not to overfill the refrigerating system.
- Prior to recharging the system, it shall be pressure-tested with the appropriate purging gas. The system shall be leak-tested on completion of charging but prior to commissioning. A follow up leak test shall be carried out prior to leaving the site.

⚠ DANGER continued

- Repair and maintenance to electrical components shall include initial safety checks and component inspection procedures. If a fault exists that could compromise safety, then no electrical supply shall be connected to the circuit until it is satisfactorily dealt with. If the fault cannot be corrected immediately but it is necessary to continue operation, an adequate temporary solution shall be used. This shall be reported to the owner of the equipment, so all parties are advised.
- Confirm that capacitors are discharged: this shall be done in a safe manner to avoid possibility of sparking.
- Confirm that no live electrical components and wiring are exposed while charging, recovering, or purging the system.
- Confirm that there is continuity of earth bonding (grounding).
- During repairs to sealed components, all electrical supplies shall be disconnected from the equipment being worked upon prior to any removal of sealed covers, etc. If it is absolutely necessary to have an electrical supply to equipment during servicing, then a permanently operating form of leak detection shall be located at the most critical point to warn of a potentially hazardous situation.
- Where electrical components are being changed, they shall be fit for the purpose and to the correct specification. At all times, Hoshizaki America's maintenance and service guidelines shall be followed. If in doubt, consult Hoshizaki America's Technical Support department for assistance.
- Confirm the actual refrigerant charge is in accordance with the room size within which the refrigerant containing parts are installed.
- Confirm the ventilation machinery and outlets are operating adequately and are not obstructed.
- Confirm marking to the equipment continues to be visible and legible. Markings and signs that are illegible shall be corrected.
- Confirm refrigerating pipe or components are installed in a position where they are unlikely to be exposed to any substance which may corrode refrigerant containing components, unless the components are constructed of materials which are inherently resistant to being corroded or are suitably protected against being so corroded.
- Particular attention shall be paid to the following to ensure that by working on electrical components, the casing is not altered in such a way that the level of protection is affected. This shall include damage to cables, excessive number of connections, terminals not made to original specification, damage to seals, incorrect fitting of glands, etc.
- Ensure that the apparatus (control box/component) is mounted securely.
- Ensure that seals or sealing materials have not degraded to the point that they no longer serve the purpose of preventing the ingress of flammable atmospheres. Replacement parts shall be in accordance with Hoshizaki America’s specifications.
- Do not apply any permanent inductive or capacitance loads to the circuit without ensuring that this will not exceed the permissible voltage and current permitted for the equipment in use.

⚠ DANGER continued

- Intrinsically safe components are the only types that can be worked on while live in the presence of a flammable atmosphere. The test apparatus shall be at the correct rating.
- Replace components only with parts specified by Hoshizaki America. Other parts can result in the ignition of refrigerant in the atmosphere from a leak.
- Check that cabling will not be subject to wear, corrosion, excessive pressure, vibration, sharp edges, or any other adverse environmental effects. The check shall also take into account the effects of aging or continual vibration from sources such as compressors or fans.

R-290 Classe A3 Réfrigérant Inflammable Utilisé

⚠ DANGER

Risque De Feu Ou D'Explosion. Fluide Frigorigène Inflammable Utilisé.

- Assurez-vous de suivre toutes les informations importantes de sécurité situées au début de ce manuel et dans cette section.
- L'appareil ne doit être diagnostiqué et réparé que par un personnel qualifié afin de prévenir les risques de mort, d'électrocution, de blessures graves ou d'incendie.
- L'entretien doit être effectué par du personnel formé et certifié pour la manipulation de réfrigérants inflammables afin de réduire au minimum le risque d'inflammation dû à des pièces incorrectes ou à un entretien inadéquat.
- Suivez attentivement les instructions de manutention conformément aux réglements nationaux.
- Ne pas utiliser de dispositifs mécaniques ou d'autres moyens pour accélérer le processus de dégivrage ou pour nettoyer, autres que ceux recommandés par le fabricant.
- Attention, les fluides frigorigénes peuvent ne pas dégager d'odeur.
- Ne pas perforer la tubulure contenant le frigorigène. Risque de feu ou d'explosion si la tubulure contenant le frigorigène est perforée; suivre les instructions de manutention avec soin.
- Les pièces doivent être remplacées par des pièces similaires, de manière à réduire au minimum le risque d'inflammation dû à des pièces incorrectes.
- Ne placez aucune source d'inflammation potentielle dans ou près de l'appareil.
- Avant de commencer à travailler sur des systèmes contenant des réfrigérants inflammables, des contrôles de sécurité sont nécessaires pour s'assurer que le risque d'inflammation est minimisé.
- Tout le personnel d'entretien et les autres personnes travaillant dans la zone locale doivent être informés de la nature des travaux effectués. Les travaux dans des espaces confinés doivent être évités.
- Les travaux doivent être entrepris selon une procédure contrôlée afin de minimiser le risque de présence de gaz ou de vapeur inflammable pendant l'exécution des travaux.
- La zone doit être contrôlée à l'aide d'un détecteur de réfrigérant approprié avant et pendant les travaux, afin de s'assurer que le technicien est conscient de l'existence d'atmosphères potentiellement toxiques ou inflammables.
- Assurez-vous que l'équipement de détection des fuites utilisé est adapté à l'utilisation de tous les réfrigérants applicables, c'est-à-dire qu'il ne produit pas d'étincelles, qu'il est correctement scellé ou qu'il est intrinsèquement sûr. REMARQUE: L'utilisation de mastic silicone peut réduire l'efficacité de certains types d'équipements de détection des fuites.
- En aucun cas, des sources potentielles d'inflammation ne doivent être utilisées pour rechercher ou détecter des fuites de réfrigérant. Une lampe haloïde (ou tout autre détecteur utilisant une flamme nue) ne doit pas être utilisée.

⚠ DANGER Continué

- Les méthodes de détection de fuite suivantes sont considérées comme acceptables pour tous les systèmes de réfrigération:
  - Des détecteurs de fuites électroniques peuvent être utilisés pour détecter les fuites de réfrigérants, mais, dans le cas de réfrigérants inflammables, la sensibilité pourrait ne pas être adéquate ou nécessiter un réétalonnage. (L'équipement de détection doit être étalonné dans une zone sans réfrigérant.) Assurez-vous que le détecteur n'est pas une source potentielle d'inflammation et qu'il est adapté au réfrigérant utilisé. L'équipement de détection des fuites doit être réglé sur un pourcentage de la LII du réfrigérant et doit être étalonné en fonction du réfrigérant utilisé, et le pourcentage approprié de gaz (25% au maximum) est confirmé.
  - Les liquides de détection des fuites conviennent également à la plupart des réfrigérants, mais l'utilisation de détergents contenant du chlore doit être évitée, car le chlore peut réagir avec le réfrigérant et corroder la tuyauterie en cuivre.

    Remarque : Voici quelques exemples de liquides de détection de fuites :
    - méthode des bulles
    - agents de méthode fluorescents
- Si un travail à chaud doit être effectué sur l'équipement réfrigérant ou toute partie associée, un équipement d'extinction d'incendie approprié doit être disponible. Un extincteur à poudre chimique ou à CO_2 devrait être installé à proximité de la zone de chargement. Un extincteur chimique de classe B doit être disponible à tout moment.
- Il est interdit à toute personne effectuant des travaux en rapport avec un système réfrigérant qui impliquent la mise à nu d'une tuyauterie d'utiliser des sources d'inflammation de manière à entraîner un risque d'incendie ou d'explosion. Toutes les sources d'inflammation possibles, y compris la cigarette, doivent être suffisamment éloignées du site d'installation, de réparation, d'enlèvement et d'élimination, au cours desquels du réfrigérant peut éventuellement être libéré dans l'espace environnant. Avant d'entamer les travaux, la zone autour de l'équipement doit être étudiée pour s'assurer qu'il n'y a aucun risque d'inflammabilité ou d'inflammation. Des panneaux «Interdiction de fumer» doivent être affichés.
- Assurez-vous que la zone est à l'air libre ou qu'elle est correctement ventilée avant de pénétrer dans le système ou d'effectuer un travail à chaud. Un certain degré de ventilation doit être maintenu pendant la période où les travaux sont effectués. La ventilation doit permettre de disperser en toute sécurité tout réfrigérant libéré et, de préférence, de l'expulser dans l'atmosphère.

⚠ DANGER Continué

- Pour pénétrer dans le circuit du réfrigérant afin d'effectuer des réparations ou pour toute autre raison, des procédures conventionnelles doivent être utilisées. Toutefois, pour les réfrigérants inflammables, il est important de suivre les meilleures pratiques, car l'inflammabilité est un facteur à prendre en considération. La procédure suivante doit être respectée:
  - éliminer le réfrigérant en toute sécurité conformément aux réglementations locales et nationales
  - purger le circuit avec du gaz inerte
  - évacuer (en option pour A2L)
  - purger avec du gaz inerte (en option pour A2L)
- ouvrir le circuit par coupure• Si une fuite est suspectée, toutes les flammes nues doivent être enlevées/éteintes.
- Si une fuite de réfrigérant nécessitant un brasage est constatée, tout le réfrigérant doit être récupéré dans le système ou isolé (au moyen de vannes d'arrêt) dans une partie du système éloignée de la fuite.
- Lors de l'élimination du réfrigérant d'un système, que ce soit pour l'entretien ou la mise hors service, il est recommandé de veiller à ce que tous les réfrigérants soient éliminés en toute sécurité.
- Lors du transfert de réfrigérant dans des bouteilles, veillez à ce que seules des bouteilles de récupération de réfrigérant appropriées soient utilisées. Assurez-vous que le nombre de bouteilles nécessaires pour contenir la charge totale du système est disponible. Toutes les bouteilles à utiliser sont désignées pour le réfrigérant récupéré et étiquetées pour ce réfrigérant (c'est-à-dire des bouteilles spéciales pour la récupération du réfrigérant). Les bouteilles doivent être équipées d'une soupape de surpression et de soupapes d'arrêt associées qui sont en bon état de fonctionnement. Les bouteilles de récupération vides sont évacuées et, si possible, refroidies avant la récupération.
- L'équipement de récupération doit être en bon état de fonctionnement, accompagné d'un ensemble d'instructions concernant l'équipement disponible et doit être adapté à la récupération de tous les réfrigérants appropriés, y compris, le cas échéant, les réfrigérants inflammables. En outre, un ensemble de balances étalonnées doit être disponible et en bon état de fonctionnement. Les tuyaux doivent être complets, équipés de raccords de déconnexion sans fuite et en bon état. Avant d'utiliser la machine de récupération, vérifiez qu'elle est en bon état de fonctionnement, qu'elle a été correctement entretenue et que tous les composants électriques associés sont scellés pour éviter toute inflammation en cas de fuite de réfrigérant. Consulter le fabricant en cas de doute.
- Le réfrigérant récupéré doit être renvoyé au fournisseur de réfrigérant dans la bouteille de récupération appropriée et le bon de transfert de déchets correspondant doit être établi. Ne mélangez pas les réfrigérants dans les unités de récupération et surtout pas dans les bouteilles.

⚠ DANGER Continué

- Si les compresseurs ou les huiles de compresseur doivent être retirés, assurez-vous qu'ils ont été évacués à un niveau acceptable afin de s'assurer qu'il ne reste pas de réfrigérant inflammable dans le lubrifiant. Le processus d'évacuation doit être effectué avant que le compresseur ne soit renvoyé aux fournisseurs. Seul le chauffage électrique du boîtier du compresseur doit être utilisé pour accélérer ce processus. Lorsque l'huile est vidangée d'un système, cette opération doit être effectuée en toute sécurité.• En plus des procédures de charge conventionnelles, les exigences suivantes doivent être respectées :
  - S'assurer qu'aucune contamination de différents réfrigérants ne se produit lors de l'utilisation de l'équipement de charge. Les tuyaux ou conduites doivent être aussi courts que possible afin de minimiser la quantité de réfrigérant qu'ils contiennent.
  - Les bouteilles doivent être maintenues dans une position appropriée conformément aux instructions.
  - S'assurer que le système de réfrigération soit mis à la terre avant de charger le système avec du réfrigérant.
  - Étiqueter le système lorsque la charge est terminée (si cela n'a pas déjà été fait).
  - Il faut veiller à ne pas trop remplir le système de réfrigération.
- Avant de recharger le système, celui-ci doit être testé sous pression avec le gaz de purge approprié. Le système doit être soumis à un essai de fuite à la fin de la charge, mais avant la mise en service. Un test de contrôle de fuite doit être effectué avant de quitter le site.
- La réparation et l'entretien des composants électriques incluent les contrôles de sécurité initiaux et les procédures d'inspection des composants. En cas de défaut susceptible de compromettre la sécurité, aucune alimentation électrique ne doit être connectée au circuit tant que le problème n'a pas été résolu de manière satisfaisante. Si le défaut ne peut être corrigé immédiatement mais qu'il est nécessaire de poursuivre l'exploitation, une solution temporaire adéquate doit être utilisée. Cela doit être signalé au propriétaire de l'équipement, afin que toutes les parties soient informées.
- S'assurer que les condensateurs sont déchargés : cette opération doit être effectuée en toute sécurité afin d'éviter tout risque d'étincelle.
- S'assurer qu'aucun composant ou câblage électrique sous tension n'est exposé lors de la charge, de la récupération ou de la purge du système.
- S'assurer de la continuité de la mise à la terre.
- Lors des réparations de composants scellés, toutes les alimentations électriques doivent être déconnectées de l'équipement sur lequel on travaille avant tout retrait des couvercles scellés, etc. Si l'alimentation électrique de l'équipement est absolument nécessaire pendant l'entretien, un dispositif de détection des fuites fonctionnant en permanence doit être placé au point le plus critique afin de signaler en cas de situation potentiellement dangereuse.
- Lorsque des composants électriques sont remplacés, ils doivent être adaptés à l'usage prévu et répondre aux spécifications correctes. Les directives de maintenance et d'entretien de Hoshizaki America doivent être respectées à tout moment. En cas de doute, consulter le service d'assistance technique de Hoshizaki America pour obtenir de l'aide.

⚠ DANGER Continué

- S'assurer que la charge réelle de réfrigérant est conforme à la taille de la pièce dans laquelle les pièces contenant du réfrigérant sont installées.
- S'assurer que les dispositifs et les sorties de ventilation fonctionnent correctement et ne sont pas obstrués.
- S'assurer que le marquage de l'équipement est toujours visible et lisible. Les indications et les panneaux illisibles doivent être corrigés.
- S'assurer que les tuyaux ou les composants de réfrigération sont installés dans un endroit où ils ne risquent pas d'être exposés à une substance susceptible de corroder les composants contenant du réfrigérant, à moins que les composants ne soient construits avec des matériaux intrinsèquement résistants à la corrosion ou qu'ils ne soient protégés de manière appropriée contre la corrosion.
- Une attention particulière doit être accordée aux points suivants afin de s'assurer qu'en travaillant sur les composants électriques, le boîtier n'est pas altéré de manière à ce que le niveau de protection soit affecté. Il s'agit notamment des dommages causés aux câbles, du nombre excessif de connexions, des terminaux non conformes aux spécifications d'origine, des dommages causés aux joints et du montage incorrect des presse-étoupes, etc.
- S'assurer que l'appareil (boîtier de commande/composant) est solidement fixé.
- S'assurer que les joints ou les matériaux d'étanchéité ne sont pas dégradés au point de ne plus pouvoir empêcher la pénétration d'atmosphères inflammables. Les pièces de rechange doivent être conformes aux spécifications de Hoshizaki America.
- N'appliquez aucune charge inductive ou capacitive permanente au circuit sans vous assurer que celle-ci ne dépassera pas la tension et le courant autorisés pour l'équipement utilisé.
- Les composants à sécurité intrinsèque sont les seuls types de composants sur lesquels il est possible de travailler sous tension en présence d'une atmosphère inflammable. L'appareil d'essai doit être adapté à la puissance requise.
- Ne remplacer les composants que par des pièces spécifiées par Hoshizaki America. D'autres pièces peuvent entraîner l'inflammation du réfrigérant dans l'atmosphère à la suite d'une fuite.
- Vérifier que le câblage ne sera pas soumis à l'usure, à la corrosion, à une pression excessive, à des vibrations, à des arêtes vives ou à tout autre effet environnemental négatif. Le contrôle doit également prendre en compte les effets du vieillissement ou des vibrations continues provenant de sources telles que les compresseurs ou les ventilateurs.

B. Service Diagnosis

R-290 Class A3 Flammable Refrigerant Used

⚠ DANGER

Risk of Fire or Explosion. Flammable Refrigerant Used.

- Be sure to follow all Important Safety Information located at the beginning of this manual and at the beginning of section "III.A. Safety Precautions When Servicing."
- Servicing shall be done by trained service personnel with certified competence in handling flammable refrigerants to minimize the risk of possible ignition due to incorrect parts or improper service.

Risque De Feu Ou D'Explosion. Fluide Frigorigène Inflammable Utilisé.

- Assurez-vous de suivre toutes les informations importantes de sécurité qui se trouvent au début du présent manuel et au début de la section «III.A. Précautions de sécurité lors de l'entretien.»
- L'entretien doit être effectué par du personnel formé et certifié pour la manipulation de réfrigérants inflammables afin de réduire au minimum le risque d'inflammation dû à des pièces incorrectes ou à un entretien inadéquat.

⚠ WARNING

- Risk of electric shock. Use extreme caution and exercise safe electrical practices.
- Wear appropriate personal protective equipment (PPE) when servicing the appliance.
- Moving parts (e.g., fan blade) can crush and cut. Keep hands clear.
- Appliance is heavy. Use care when lifting or positioning. Work in pairs when needed to prevent injury or damage.
- Make sure all food zones in the appliance are clean after service.

NOTICE

- This appliance is not intended for outdoor use.
- Normal operating ambient temperature:
  – Refrigerators and Solid Door Freezers 45°F to 100°F (7°C to 38°C)
  – Glass Door Freezers 45°F to 80°F (7°C to 27°C)
  Operation of the appliance, for extended periods, outside of this normal temperature range may affect appliance performance.
- The appliance must not be located next to ovens, grills, or other high heat producing equipment.
- The appliance must not be located in a corrosive environment.
- Minimum Clearance:

Models	Side	Top	Rear
Refrigerators and Freezers (Except 2-Section Freezers)	0" (0 cm)	0" (0 cm)	3" (8 cm)
2-Section Freezers	0" (0 cm)	10" (25 cm)	3" (8 cm)

The diagnostic procedure is a sequence check that allows you to diagnose the electrical system and components. Before proceeding, check for correct installation and proper voltage per nameplate. Always choose a neutral (W) to establish a good neutral connection when checking high voltages. If the display is in alarm, see "III.I. Alarm Safeties."

IMPORTANT

The maximum allowable voltage variation is ±6 percent of the nameplate rating. 115VAC is used as a reference voltage when checking voltage to components. Voltage may vary depending on power supply.

1. Factory Default Settings:
   a) Temperature Setpoint:

Model	Auxiliary Code	Temperature Setpoint
Refrigerator	All	38°F (3°C)
Freezer	All	-2°F (-19°C)

   b) Temperature Display Scale: °F.

For further details, see "III.C. Control Module Check" or "III.F. Controls and Adjustments."

- There is a minimum 2-min. Comp on time and 2-min. Comp off time.

1) Unplug the appliance from the electrical outlet.
2) Remove the front panel.
3) Plug the appliance back into the electrical outlet.
4) Confirm 115VAC at CM 2 (L) (BK) to neutral (W).

1. Refrigerator

5) **Startup/Cool Down**–MH, PH, and TXVH energize. There is a slight delay, Comp, ConFM, and EvapFM energize. On PT2A and R_2A, MH and BH also energize. Cabinet temperature appears on display and 2-hr. defrost timer starts. Note: If DTh is above 50°F (10°C) EvapFM is de-energized.

a) **MH Diagnosis:** MH energizes at startup (except PT2A). If 115VAC is present, check amp draw of MH. If an amp reading is not present, check the continuity of MH. If defective, replace MH. Note: MH energizes and de-energizes with Comp and CondFM on PT2A and R_2A models.

b) **BH Diagnosis:** BH energizes at startup on R_1A and with Comp on R_2A. If 115VAC is present, check amp draw of BH. If an amp reading is not present, check the continuity of BH. If defective, replace BH. Note: BH energizes and de-energizes with Comp and CondFM on R_2A models.

c) **TXVH (if applicable) Diagnosis:** Confirm amp draw of TXVH. If no amp draw available, check for 115VAC at TXVH grey wire (GY) to neutral (W). If 115VAC is not present, check wiring connections to TXVH. If 115VAC is present, check TXVH continuity. If open, replace TXVH.

d) **EvapFM Diagnosis:** Confirm that EvapFM(s) energize. If not, confirm DTh is at 50°F (10°C) or lower, doors are closed and DS engaged, check DS continuity. If DTh is above 50°F (10°C), wait for evaporator to cool down. If DS is engaged and contacts are open, replace DS. If DS is engaged and contacts are closed, check for 115VAC at CM 5 (F) dark blue (DBU) wire to neutral white (W) wire. If 115VAC is not present, replace CM. If 115VAC is present, check EvapFM blades for binding and EvapFM continuity.

e) **Solid Door Cabinet Light Diagnosis:** LED(s) are activated from door switch. Open the door (upper on HS/HG), confirm LED(s) energizes. If not, with door open, check for 5 to 12VDC at CM S4 brown (BR) to CM S4 blue (BU). If 5 to 12VDC is not present at CM S4 brown (BR) to CM S4 blue (BU), confirm 115VAC power supply to CM at terminals 2 (L) black (BK) to 3 (N) white (W). If 115VAC is present, and LED(s) are off, check DS continuity. If DS is disengaged (open) and contacts are closed, replace DS. If DS is disengaged (open) and contacts are open, check for 115VAC from CM 6 (LED) (Y) to a neutral (W). If 115VAC is not present, replace CM. If 115VAC is present at CM 6 (LED) (Y) to a neutral (W) and LED(s) are not on, check for 24VDC at DCD black (BK) wire to DCD red (R) wire. If 24VDC is not present, check continuity of DCD driver. If open, replace DCD driver. If 24VDC is present and LED(s) are not on, check wiring harness and wiring connections from DCD to LED(s). If connections are good and LED(s) are not on, replace LED(s).

f) **Glass Door Cabinet Light Diagnosis:** LED(s) are activated from control module light switch. Glass door models feature lights that are controlled by the Standby/Light control button located on the control module. Press the standby/light button quickly to turn the light on or off. If LED(s) fail to turn on, check for 115VAC from CM 6 (LED) (Y) to a neutral (W). If 115VAC is not present at CM 6 (LED) (Y) to a neutral (W), replace CM. If 115VAC is present at CM 6 (LED) (Y) to a neutral (W) and LED(s) are not on, check for 24VDC at DCD black (BK) wire to DCD red (R) wire. If 24VDC is not present, check continuity of DCD driver. If open, replace DCD driver. If 24VDC is present and LED(s) are not on, check wiring harness and wiring connections from DCD to LED(s). If connections are good and LED(s) are not on, replace LED(s).

g) **CM Diagnosis:** Cabinet temperature appears on display. If not, check for 115VAC at CM 2 (L) (BK) to CM 3 (N) (W). If 115VAC is not present, check power cord connections and breaker/fuse. Confirm wiring connections are secure for both CM 2 (L) (BK) (power supply) and CM 3 (N) (W). If 115VAC is present and display is off, replace CM.

h) **Comp and ConFM Diagnosis:** Confirm Comp and ConFM energize. If not, check for 115VAC at CM 1 (C) (V) to a neutral (W). If 115VAC is not present, check CTh status. See "III.D. Thermistor Check." If CTh ohm reading is in proper range, replace CM. If not in range, replace thermistor. If 115VAC is present at CM 1 (C) (V) to a neutral (W), check for 115VAC at both HPS (V) wires to a neutral (W). If 115VAC is present on one and not the other, check HPS continuity. If open, allow time for HPS to reset. If HPS does not reset, see "i) HPS Activation" below. If HPS is closed and 115VAC present on both HPS (V) wires to a neutral (W), check for 115VAC at condensing unit receptacle and condensing unit power supply cord (BK) to a neutral (W). If 115VAC is not present at condensing unit receptacle or power supply cord (BK), correct loose wiring or replace receptacle or power supply cord. If 115VAC is present at condensing unit power supply cord (BK) and ConFM is energized but Comp is not, check for 115VAC at both Comp external protector wires to a neutral (W). If 115VAC is present on one and not the other, external protector is open. Give external protector time to cool and reset. If Comp external protector does not reset, replace Comp external protector. If 115VAC is present on both Comp external protector wires, check Comp start capacitor, start relay, and Comp motor windings, replace as needed. If Comp does not start, replace condensing unit. If ConFM is not energized, check ConFM fan blades for binding and motor winding continuity.

If Comp and ConFM are energized and the cabinet does not cool down, check for a restriction in the refrigeration circuit, correct TXV operation, and correct refrigerant charge. See nameplate for correct charge amount.

i) **HPS Activation:** Confirm ConFM is energized and fan blade turns freely. Confirm condenser coil is not clogged or restricted. Confirm there are no restrictions in the refrigeration circuit (TXV and drier). Let refrigeration circuit pressures equalize. If HPS does not reset and pressures are equalized, replace HPS. If pressures are not equalized, reclaim refrigerant and diagnose refrigeration circuit restriction.

6) **Cool Down Achieved**–MH and BH continues (de-energizes on PT2A and R_2A models). CTh cools to 3°F (1.7°C) below setpoint. Comp icon turns off and Comp and ConFM de-energize. EvapFM icon stays on and EvapFM continues. 60-sec. later, EvapFM icon turns off and EvapFM de-energizes.

a) **Diagnosis**: Confirm Comp icon turns off and Comp, ConFM, and MH (PT2A and R_2A models) de-energize. If not, and Comp and ConFM were energized longer than 2 min., check CTh status. See "III.D. Thermistor Check."

b) **CM, Comp, ConFM, MH (PT2A and R_2A models), and EvapFM Diagnosis:** If CTh ohm reading is in proper range and Comp, CondFM, and MH continue, check for 115VAC at CM 1 (C) (V) to neutral (W). If 115VAC is present at CM 1 (C) (V), replace CM. 1-min. after Comp icon turns off, confirm EvapFM icon turns off and EvapFM de-energizes. If not, check for 115VAC at CM 5 (F) (DBU) to neutral (W). If 115VAC is present, replace CM.

7) **Defrost–** The defrost icon turns on and "dEF" is displayed during defrost. There is a 5-min. minimum defrost time, a 1-hr. maximum defrost time, and a 2-hr. defrost interval. If DTh above 50°F (10°C) at time of defrost, 2-hr. cumulative Comp run and 2-hr. continuous Comp run defrost timers reset and defrost is skipped.

1a) **Time-Initiated**: 2-hr. cumulative Comp run or 2-hr continuous Comp run defrost timer terminates (Comp energized more than 2 hrs.). Defrost icon turns on and "dEF" is displayed. Comp icon turns off. Comp, ConFM, and MH (PT2A and R_2A models) de-energize. EvapFM icon stays on and EvapFM continues.

1b) **Manually-Initiated**: To initiate a manual defrost, press the manual defrost button on the display. Defrost icon turns on and "dEF" is displayed. If on, Comp icon turns off. Comp, ConFM, and MH (PT2A and R_2A models) de-energize. EvapFM icon stays on and EvapFM continues.

2) **Defrost Termination**:

(1) DTh warms to 44°F (6.6°C). If not, confirm DTh status. See "III.D. Thermistor Check." If DTh is in proper range, Comp icon turns on. Comp, ConFM, and MH (PT2A and R_2A models) energize. Defrost icon, EvapFM icon, and "dEF" continues. EvapFM remains energized.

(2) 15-min. temperature display delay timer terminates. Cabinet temperature replaces "dEF" on CM display.

Defrost Diagnosis:

1) **Time-Initiation or Manual Initiation**: Time-Initiation; 2-hr. cumulative compressor run or 2-hr continuous compressor run defrost timer terminates. Note; EvapFM remains energized during defrost.
Manual Initiation; CM defrost button pressed.
Note: There is 5-min. minimum defrost time and a 1-hr. maximum defrost time.

(1) **CM, Comp, and CondFM Diagnosis**: Confirm defrost icon turns on, "dEF" is displayed, and Comp icon turns off. If not, replace CM. Next, check that CM 1 (C) (V) does not have 115VAC to neutral (W). If 115VAC is present, replace CM.

(2) **EvapFM Diagnosis**: Confirm EvapFM icon is on. If not, confirm DTh is below 50°F (10°C). Next, check for 115VAC at CM 5 (F) (DBU) to neutral (W). If 115VAC is not present, replace CM.

2) **Defrost Termination**: DTh warms to 44°F (6.6°C). If not, confirm DTh status. See "III.D. Thermistor Check." If DTh is in proper range, Comp icon turns on and Comp, ConFM, and MH (PT2A and R_2A models) energize. 15-min. temperature display timer starts. Once 15-min. temperature display timer terminates, "dEF" is replaced by cabinet temperature on display.

(1) **Comp energized:** DTh warms to 44°F (6.6°C), confirm Comp icon turns on and Comp and ConFM energize. If not, confirm cabinet temperature is warm enough for Comp operation. Next, check for 115VAC at CM 1 (C) (V) to neutral (W). If 115VAC is not present, check CTh status. See "III.D. Thermistor Check." If CTh ohm reading is in proper range, Comp icon is on, and 115VAC is not present at CM 1 (C) (V), replace CM. If 115VAC is present, check for 115VAC at CUR (V). If 115VAC is present at CM 1 (C) (V) to neutral (W) and not at CUR (V), check HPS continuity. See "1.5)h) HPS Activation" above. If HPS is closed and 115VAC present, check for 115VAC at condensing unit power supply cord (BK) to neutral (W).If 115VAC is not present at condensing unit power supply cord (BK), replace condensing unit power supply cord. If 115VAC is present at condensing unit power supply cord (BK) and ConFM is energized but Comp is not, check for 115VAC at Comp external protector to neutral (W). If 115VAC is not present, give time for external protector to cool and reset. If Comp external protector does not reset, replace Comp external protector. If 115VAC is present on both Comp external protector wires, check run capacitor, start capacitor, start relay, and Comp motor windings. If ConFM is not energized, check ConFM fan blades for binding and motor winding continuity. If Comp does not start, replace condensing unit.

(2) **15-min. temperature display delay timer terminates**: 15 min. after Comp icon turns on and Comp and ConFM energize, "dEF" is replaced by cabinet temperature on display. If not, replace CM.

Legend: **BH**–bottom heater; **CL**–cabinet light; **CM**–control module; **Comp**–compressor; **ConFM**–condenser fan motor; **CTh**–cabinet thermistor; **DCD**–direct current driver; **DS**–door switch; **DTh**–defrost thermistor; **EvapFM**–evaporator fan motors; **HPS**–high-pressure switch; **MH**–mullion heater; **TXV**–thermostatic expansion valve; **TXVH**–thermostatic expansion valve heater; **CUR**–condensing unit receptacle

2. Freezer

5) **Startup/Cool Down**– MH, PH, DrH, and TXVH energize. There is a slight delay, then Comp, ConFM, and EvapFM energize. Cabinet temperature appears on display and 5-hr. Comp cumulative run time defrost timer starts.

a) **MH and PH Diagnosis**: PH and MH energize at startup. If 115VAC is present, check amp draw of PH and/or MH. If an amp reading is not present, check the continuity of PH and MH. If defective, replace PH or MH.

b) **DrH Diagnosis**: Confirm amp draw of DrH. If no amp draw available, check for 115VAC at DrH black wire (BK) to neutral (W). If 115VAC is not present, check wiring connections to DrH. If 115VAC is present, check DrH continuity. If open, replace DrH.

c) **TXVH Diagnosis:** Confirm amp draw of TXVH. If no amp draw available, check for 115VAC at TXVH grey wire (GY) to neutral (W). If 115VAC is not present, check wiring connections to TXVH. If 115VAC is present, check TXVH continuity. If open, replace TXVH.

d) **Cabinet Light Diagnosis**: Open the door (upper on HS/HG), confirm CL energizes. If not check for 115VAC at CM 2 (L) (BK) to neutral (W) and CM 6 (Y) (LED) to neutral (W). If 115VAC is not present at CM 2 (L) (BK), confirm power supply. If 115VAC is present at CM 2 (L) (BK), check DS continuity. If DS is disengaged and contacts are closed, replace DS. If DS is de-energized, and 115VAC is not present at CM 6 (Y) (LED) to neutral (W), replace CM. If DS is de-energized and 115VAC is present at CM 6 (Y) (LED) to neutral (W) and LEDs are not on, check for 24VDC at DCD black (BK) 24VDC wire to DCD red (R) 24VDC wire. If 24VDC is not present, check continuity of DCD driver. If open, replace DCD driver. If 24VDC is present and LEDs are not on, check wiring harness and wiring connections from DCD to LED. If connections are good and LEDs are not on, replace LEDs.

e) **CM Diagnosis**: Cabinet temperature appears on display. If not, check for 115VAC at CM 2 (L) (BK) to CM 3 (N) neutral (W). If 115VAC is not present, check power cord connections and breaker/fuse. Confirm wiring connections are secure for both CM 2 (L) (BK) (power supply) and CM 3 (N) (W) (neutral). If 115VAC is present and display is off, replace CM.

f) **Comp and ConFM Diagnosis**: Confirm Comp and ConFM energize. If not, check for 115VAC at CM 1 (C) (V) to neutral (W). If 115VAC is not present, check CTh status. See "III.D. Thermistor Check." If CTh ohm reading is in proper range, and 115VAC is not present at CM 1 (C) (V) to neutral (W), replace CM. If thermistor ohm reading is not in range, replace thermistor. If 115VAC is present at CM 1 (C) (V) to neutral (W), check for 115VAC at CUR (V) to neutral (W). If 115VAC is not present, check continuity of HPS. If open, allow time for HPS to reset. If HPS does not reset, see "h) HPS Activation" below. If HPS is closed and 115VAC present, check for 115VAC at condensing unit power supply cord (BK) to neutral (W). If 115VAC is not present at condensing unit power supply cord (BK), replace condensing unit power supply cord. If 115VAC is present at condensing unit power supply cord (BK) and ConFM is energized but Comp is not, check for 115VAC at Comp external protector to neutral (W). If 115VAC is not present, give time for external protector to cool and reset. If Comp external protector does not reset, replace Comp external protector. If 115VAC is present on both Comp external protector wires, check run capacitor (2-Section), start capacitor, start relay, and Comp motor windings. If Comp does not start, replace condensing unit. If ConFM is not energized, check ConFM fan blades for binding and motor winding continuity.

If Comp and ConFM are energized and the cabinet does not cool down, check for a restriction in the refrigeration circuit, correct TXV operation, and correct refrigerant charge. See nameplate for correct charge amount.

g) **EvapFM Diagnosis**: Confirm that EvapFM(s) energizes 30-sec. after startup. If not, confirm DTh is above 32°F (0°C). If above 32°F (0°C), wait for evaporator to cool down. Next, confirm doors are closed and DS engaged, check DS continuity. If DS is engaged and contacts are open, replace DS. If DS is engaged and contacts are closed, check for 115VAC at CM 5 (F) dark blue (DBU) wire to neutral white (W) wire. If 115VAC is not present, replace CM. If 115VAC is present, check EvapFM blades for binding and EvapFM continuity.

h) **HPS Activation**: Confirm ConFM is energized and fan blade turns freely. Confirm condenser coil is not clogged or restricted. Confirm there are no restrictions in the refrigeration circuit (TXV and drier). Let refrigeration circuit pressures equalize. If HPS does not reset and pressures are equalized, replace HPS. If pressures are not equalized, reclaim refrigerant and diagnose refrigeration circuit restriction.

6) **Cool Down Achieved**–PH, MH, and DrH continue. CTh cools to 3°F (1.7°C) below setpoint. Comp icon turns off and Comp and ConFM de-energize. EvapFM icon stays on and EvapFM continues. 60-sec. later, EvapFM icon turns off and EvapFM de-energizes.

a) **Diagnosis**: Confirm Comp icon turns off and Comp and ConFM de-energize. If not, and Comp and ConFM were energized longer than 2 min., check CTh status. See "III.D. Thermistor Check." Replace as needed.

b) **CM, Comp, ConFM, and EvapFM Diagnosis**: If CTh ohm reading is in proper range and Comp continues, check for 115VAC at CM 1 (C) (V) to neutral (W). If 115VAC is present at CM 1 (C) (V), replace CM. 1-min. after Comp icon turns off, confirm EvapFM icon turns off and EvapFM de-energizes. If not, check for 115VAC at CM 5 (F) (DBU) to neutral (W). If 115VAC is present, replace CM.

7) **Defrost**–The defrost icon turns on and "dEF" is displayed during defrost. There is a 5-min. minimum defrost time and a 1-hr. maximum defrost time, and a 5-hr. defrost interval.

1a) **Time-Initiated:** 5-hr. cumulative Comp run or 4-hr. continuous Comp run defrost timer terminates (Comp energized more than 5 hrs.). Defrost icon turns on and "dEF" is displayed. DH energizes. Comp and EvapFM icons turn off. Comp, ConFM, and EvapFM de-energize.

1b) **Manually-Initiated:** To initiate a manual defrost, press the manual defrost button on the display. Defrost icon turns on and "dEF" is displayed. DH energizes. If on, Comp and EvapFM icons turn off. Comp, ConFM, and EvapFM de-energize.

2) **Defrost-Termination**:

(1) DTh warms to 77°F (25°C). If not, confirm DTh status. See "III.D. Thermistor Check." If DTh is in proper range. DH de-energizes. 3 min. Comp delay timer starts. Defrost icon and "dEF" continues.

(2) 3 min. Comp delay timer terminates. Comp icon turns on. Comp and ConFM energize. 4-min. EvapFM delay timer starts. Defrost icon and "dEF" continue.

(3) 4-min. EvapFM delay timer terminates or the defrost thermistor cools to 15°F (-9°C), EvapFM icon turns on and EvapFM energizes. 15-min. temperature display delay timer starts. Defrost icon turns off, "dEF" continues. Note that the 4-min. EvapFM delay time is a maximum; if the defrost thermistor cools to 15°F (-9°C) before the 4-min. EvapFM delay timer terminates, EvapFM icon turns on and EvapFM energizes. Also, when the cabinet temperature is above 50°F (10°C), EvapFM delays energizing until the cabinet temperature is below 50°F (10°C).

(4) 15-min. temperature display delay timer terminates. Cabinet temperature replaces "dEF" on CM display.

Note: Pressing the defrost button on the display terminates defrost. If the cabinet temperature is above setpoint, Comp icon and EvapFM icon turns on and Comp, CondFM, and EvapFM energize.

Defrost Diagnosis:

1) **Time-Initiation or Manual Initiation**: Time-Initiation; 5-hr. Comp cumulative run or 4-hr. continuous run defrost timer terminates. Manual Initiation: CM defrost button pressed.

Note: There is 5-min. minimum defrost time and a 1-hr. maximum defrost time.

(1) **CM, Comp, CondFM, and EvapFM Diagnosis**: Confirm defrost icon turns on, "dEF" is displayed, and Comp and EvapFM icons turn off. If not, replace CM. Next, check that CM 1 (C) (V) and CM 5 (F) (DBU) do not have 115VAC to neutral (W). If 115VAC is present, replace CM.

(2) **DH Diagnosis**: Confirm DH energizes (amp draw). If not, check for 115VAC at CM 4 (H) (R) to neutral (W). If 115VAC is not present and defrost icon is on, replace CM. Next, check for 115VAC at DT (BK) to neutral (W). If 115VAC is not present on both DT black (BK) wires, check DT continuity. If open, let cool and reset. If DT does not close, replace DT. If DT is closed, check DH amp draw and continuity.

2) **Defrost-Termination**: DTh warms to 77°F (25°C). If not, confirm DTh status. See "III.D. Thermistor Check." If DTh is in proper range, DH de-energizes and 3-min. Comp delay timer starts. If DTh has not warmed to 77°F (25°C), check DT and DH continuity. Next, check DH amp draw. Once 3-min. Comp delay timer terminates, Comp icon turns on and Comp and ConFM energize. 4-min. EvapFM delay timer starts. Once 4-min. EvapFM delay timer terminates, defrost icon turns off, EvapFM icon turns on and EvapFM energizes. 15-min. temperature display timer starts. Once 15-min. temperature display timer terminates, "dEF" is replaced by cabinet temperature on display.

(1) **3-min. Comp delay timer terminates**: 3 min. after DH de-energizes, confirm Comp icon turns on and Comp and ConFM energize. If not, confirm cabinet temperature is warm enough for Comp operation. Next, check for 115VAC at CM 1 (C) (V) to neutral (W). If 115VAC is not present, check CTh status. See "III.D. Thermistor Check." If CTh ohm reading is in proper range, Comp icon is on, and 115VAC is not present at CM 1 (C) (V) to neutral (W), replace CM. If 115VAC is present, check for 115VAC at CUR (V) to neutral (W). If 115VAC is present at CM 1 (C) (V) to neutral (W) and not at CUR (V), check HPS continuity. See "2.5)h) HPS Activation" above. If HPS is closed and 115VAC present, check for 115VAC at condensing unit power supply cord (BK) to neutral (W). If 115VAC is not present at condensing unit power supply cord (BK), replace condensing unit power supply cord. If 115VAC is present at condensing unit power supply cord (BK) and ConFM is energized but Comp is not, check for 115VAC at Comp external protector to neutral (W). If 115VAC is not present, give time for external protector to cool and reset. If Comp external protector does not reset, replace Comp external protector. If 115VAC is present on both Comp external protector wires, check run capacitor (Freezer 2-Section), start capacitor, start relay, and Comp motor windings. If ConFM is not energized, check ConFM fan blades for binding and motor winding continuity. If Comp does not start, replace condensing unit.

(2) **4-min. EvapFM delay timer terminates**:
Note: The 4-min. EvapFM delay time is a maximum; if the defrost thermistor cools to 15°F (-9°C) before the 4-min. EvapFM delay timer terminates, EvapFM icon turns on and EvapFM energizes. If 15°F (-9°C) is achieved at the defrost thermistor or the 4 min. EvapFM delay timer terminates, confirm EvapFM icon turns on and EvapFM energizes. If not, confirm doors are closed and DS engaged, check DS continuity. If DS is engaged and contacts are open, replace DS. If DS is engaged and contacts are closed, check for 115VAC at CM 5 (F) (DBU) to neutral (W). If 115VAC is not present, replace CM. If 115VAC is present, check EvapFM blades for binding and EvapFM continuity.

(3) **15-min. temperature display delay timer terminates**: 15 min. after EvapFM icon turns on and EvapFM energizes, "dEF" is replaced by cabinet temperature on display. If not, replace CM.

Legend: **CL**–cabinet light; **CM**–control module; **Comp**–compressor; **ConFM**–condenser fan motor; **CTh**–cabinet thermistor; **DCD**–direct current driver; **DH**–defrost heater; **DrH**–drain heater; **DT**–defrost thermostat; **DTh**–defrost thermistor; **EvapFM**–evaporator fan motors; **HPS**–high-pressure switch; **MH**–mullion heater; **PH**–perimeter heater; **TXV**–thermostatic expansion valve; **TXVH**–thermostatic expansion valve heater; **CUR**–condensing unit receptacle

C. Control Module Check

1. Control Module Display

Before replacing CM that does not show a visible defect and that you suspect is bad, conduct the following check procedure. This procedure will help you verify your diagnosis. Always choose a neutral (W) to establish a good neutral connection when checking high voltages. Also, confirm there is a good power supply and neutral connection to CM: 115VAC at CM 2 (L) (BK) to CM 3 (N) (W).

Alarm Reset: To silence the alarm, press and release the up button with power on. For alarm information, see "III.I. Alarm Safeties."

2. Startup/Cool Down

1) Check all wiring connections. Confirm the CTh, DTh, and DS are properly connected.
2) Check for 115VAC at CM 2 (L) (BK) to CM 3 (N) neutral (W). If 115VAC is not present, check power supply and wire connections.
3) Check that cabinet temperature is displayed. If not, replace CM.
4) Check that Comp and ConFM energize. If not, check CTh status. See "III.D. Thermistor Check." If CTh ohm reading is in proper range, check for 115VAC at CM 1 (C) (V) to neutral (W). If 115VAC is not present, replace CM.
5) Check that EvapFM energizes (30-sec. delay on freezers). If not, check for 115VAC CM 5 (F) (DBU) to neutral (W). If 115VAC is not present, make sure DTh is at or below 50°F (10°C). Next, confirm doors are closed and DS engaged. If 115VAC is not present, replace CM.

3. Defrost Initiation

6) **Manual Defrost Check**:
   Refrigerator: Press and release the manual defrost button. Defrost icon turns on and "dEF" is displayed. If energized, Comp icon turns off. EvapFM icon stays on and EvapFM continues.

   Freezers: Press and release the manual defrost button. Defrost icon turns on and "dEF" is displayed. DH energizes. If energized, Comp and EvapFM icons turn off. Comp, ConFM, and EvapFM de-energize.
7) Confirm Comp, ConFM, and EvapFM (freezers) de-energize. Check for 115VAC at CM 1 (C) (V) to neutral (W) for Comp and ConFM. For freezers, check for 115VAC at CM 5 (F) (DBU) to neutral (W) for EvapFM. If "dEF" is displayed and 115VAC is present, replace CM.
8) Freezers: Confirm DH energizes. Check for 115VAC at CM 4 (H) (R) to neutral (W). If "dEF" is displayed and 115VAC is not present, replace CM.

4. Defrost Termination

9) Check that the components restart after defrost termination.

Refrigerator: DTh reaches 44°F (6.6°C). EvapFM icon stays on and EvapFM continues. Comp and ConFM energize. If not, check DTh status. See "III.D. Thermistor Check." If DTh ohm reading is in proper range, and components do not energize, check for 115VAC at CM 1 (C) (V) to neutral (W). If 115VAC is not present, replace CM. If 115VAC is present, check component continuity and replace as needed.

Freezer: DTh reaches 77°F (25°C). DH de-energizes. "dEF" continues on display. 3-min. later, Comp icon turns on and Comp and ConFM energize. EvapFM icon turns on and EvapFM energizes once DTh reaches 15°F (-9°C) or 4-min. EvapFM delay timer terminates. If not, check DTh status. See "III.D. Thermistor Check." If DTh ohm reading is in proper range, and Comp and ConFM, or EvapFM does not energize, replace CM. 15 min. after EvapFM energizes, cabinet temperature appears on CM. If components fail to start, check continuity, replace as needed.

Legend: **CM**–control module; **Comp**–compressor; **ConFM**–condenser fan motor; **CTh**–cabinet thermistor; **DH**–defrost heater; **DS**–door switch; **DTh**–defrost thermistor; **EvapFM**–evaporator fan motors; **MH**–mullion heater; **PH**–perimeter heater

D. Thermistor Check

The cabinet thermistor is used for cabinet temperature control and the defrost thermistor is used for defrost cycle termination and evaporator fan motor control.

- Refrigerator: Defrost termination is 44°F (6.6°C).
- Freezer: Defrost termination is 77°F (25°C).
- Freezer: Evaporator fan motor initiation after defrost is 15°F (-9°C) or 4-min. Evaporator fan motor delay timer terminates.
- Evaporator fan motor high-temperature control:
  Refrigerator: Defrost thermistor at or higher than 50°F (10°C).
  Freezer: Defrost thermistor at or higher than 32°F (0°C).

Thermistor resistance varies depending on temperature. The control module monitors the thermistors to control system operation. No adjustment is required.

To check thermistor resistance, follow the steps below.

1) Unplug the appliance.
2) Remove the front panel, control panel, top louver, and evaporator cover.
3) Remove the thermistor in question, then immerse the thermistor sensor portion in a glass containing ice and water for 2 to 3 min.
4) Disconnect the thermistor connector from the control module.
5) Check the resistance between the wires at the thermistor connector. Normal reading is within 16.0 to 16.7 kΩ. If outside the normal reading, replace the thermistor.
6) Reconnect and replace the thermistor in its correct position.
7) Replace the evaporator cover, top louver, control panel, and front panel in their correct positions.
8) Plug the appliance back in.

E. Diagnostic Tables

Check for correct appliance installation per the instruction manual and proper voltage per appliance nameplate.

1. Not Cooling

Not Cooling - Possible Cause	
1. Power Supply	a) Unplugged, off, blown fuse, tripped or defective circuit breaker.
	b) Loose connection.
	c) Not within specifications.
2. Cord and Plug On three-section model, check receptacle box cord and plug and one-section and two-section cords and plugs.	a) Loose connection.
	b) Defective.
3. Wiring	a) Loose connection.
	b) Faulty.
4. Control Module See "III.I. Alarm Safeties" and "III.C. Control Module Check."	a) In alarm.
	b) Defective.
5. Door Switch	a) Not engaged.
	b) Defective.
6. Evaporator Fan Motor	a) Defective.
7. High-Pressure Switch	a) Dirty condenser.
	b) Ambient temperature too warm.
	c) Condenser fan motor not operating.
	d) Refrigerant overcharge.
	e) Refrigerant lines or components restricted.
	f) Defective.
8. Compressor External Protector	a) Dirty condenser.
	b) Condenser fan motor not operating.
	c) Compressor capacitor or start relay defective.
	d) Defective.
9. Compressor	a) Defective.
10. Condenser	a) Dirty.
11. Evaporator See "2. Evaporator Frozen Up."	a) Clogged or frozen.
12. Refrigerant/Refrigerant Lines	a) Refrigerant leak.
	b) Refrigerant lines restricted.

2. Evaporator Frozen Up

Evaporator Frozen Up - Possible Cause	
1. Evaporator	a) Dirty.
2. Evaporator Fan Motor	a) Fan blades binding.
	b) Defective.
3. Defrost Thermistor	a) Out of position or defective.
4. Control Module	a) Defective.
5. Refrigerant Charge/Refrigerant Lines	a) Low.
	b) Component restriction (TXV, cap tube, drier).
6. Defrost Heater (freezer)	a) Defective.

3. Defrost

Refrigerator Defrost Fails to Initiate - Possible Cause	
1. Control Module (2-hr cumulative compressor run or 2-hr continuous compressor run defrost timer)	a) Defective.
Refrigerator Defrost Fails to Terminate - Possible Cause	
1. Defrost Thermistor (Confirm DTh status. See "III.D. Thermistor Check.")	a) Defrost termination temperature 44°F (6.6°C) not achieved.
	b) Defective.
2. Control Module	a) Defrost thermistor connection loose.
	b) Defective.
Freezer Defrost Fails to Initiate - Possible Cause	
1. 5-hr. cumulative Comp run or 4-hr. continuous run defrost timer terminated	a) Check compressor operation. See "1. Not Cooling."
2. Control Module	a) Defective.
3. Defrost Thermostat	a) Open. Cut-out: 120°F±5°F (49°C±3°C), Cut-in: 70°F±5°F (21C±3°C)
Freezer Defrost Fails to Terminate - Possible Cause	
1. Defrost Heater	a) Defrost thermostat open.
	b) Defective.
2. Defrost Thermistor (Confirm DTh status. See "III.D. Thermistor Check.")	a) Defrost termination temperature 77°F (25°C) not achieved.
	b) Defrost thermistor connection loose.
3. Control Module	a) Defective.

F. Controls and Adjustments

All models are pretested and factory set. When plugged into an electrical power supply, there is a slight delay, then the current cabinet temperature is displayed. From the display module, the cabinet setpoint and temperature display scale can be changed.

Note: When exposed to high temperatures, a high-temperature alarm "Hi" may occur at start-up. To silence the alarm, press and release the upper button. Alarm clears once temperature is within factory parameters. For details, see "III.I. Alarm Safeties."

NOTICE
• The control module is fragile, handle very carefully. • Do not change wiring and connections. Never misconnect terminals. • Do not short out power supply to test for voltage.

1. Display Icons

Control Module Icons	
Icon	**Meaning**
	Compressor Compressor running.
	Defrost Appliance is in defrost cycle. See "III.B. Service Diagnosis" for details.
	Evaporator Fan Motor Evaporator fan motor is running. Evaporator fan motor de-energizes when door is open.
	Alarm Appliance is in alarm. See "III.I. Alarm Safeties" for details.

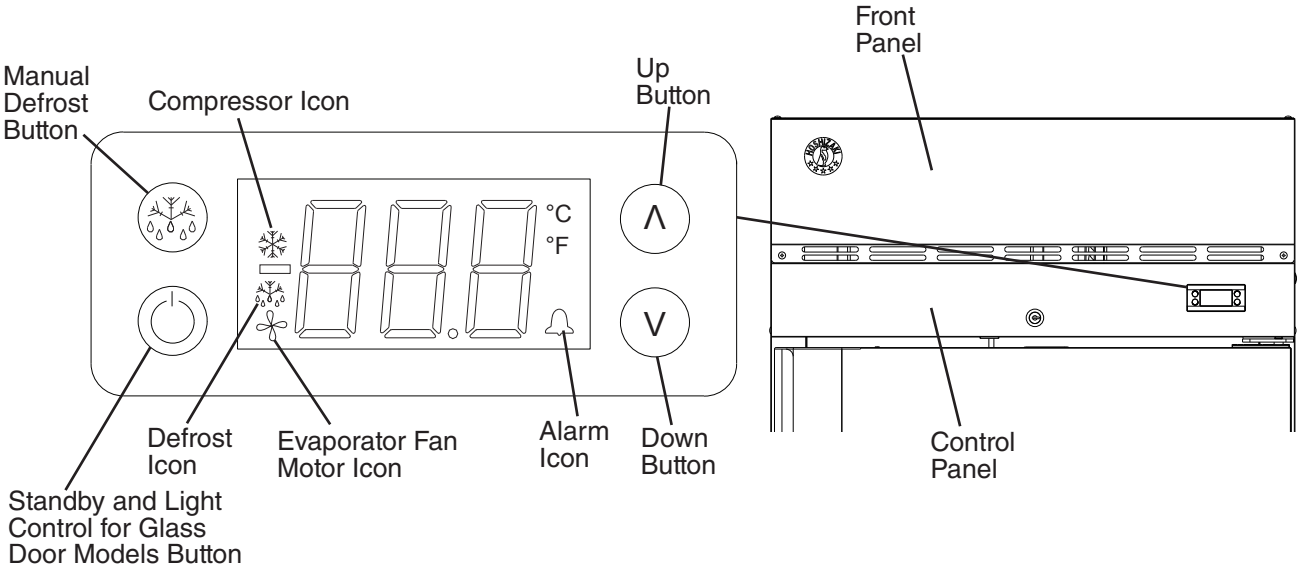

2. Display Layout

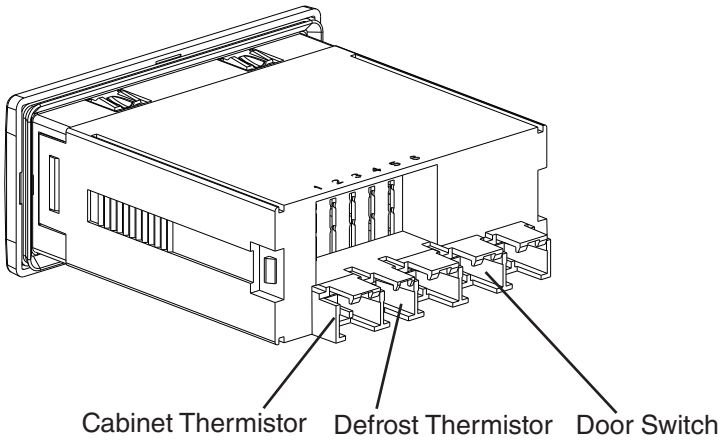

3. Control Module Connections

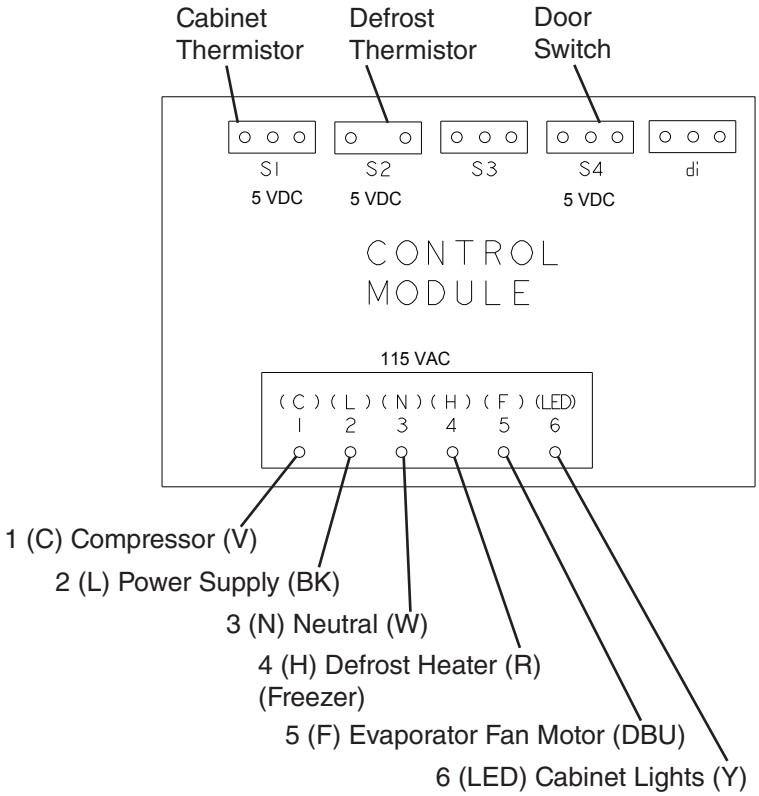

G. Temperature

The temperature default scale is °F, but it can be changed to read °C. To change, see "III.G.3. Changing the Temperature Display Scale (°F or °C)" below.

1. Default Settings

a) Temperature Setpoint:

Model	Auxiliary Code	Temperature Setpoint
Refrigerator	All	38°F (3°C)
Freezer	All	-2°F (-19°C)

b) Temperature Display Scale: °F.

2. Temperature Setpoint

The temperature setpoint is the value for the average cabinet temperature. The temperature differential for the compressor to turn on and off is ±3°F (±1.7°C) of the temperature setpoint. For example, for a refrigerator temperature setpoint of 36°F (2°C), the compressor comes on at 39°F (3.7°C), and the compressor goes off at 33°F (0.3°C). If necessary, adjust the temperature setpoint as follows:

1) To change the temperature setpoint, press and release the up or down button. The current temperature setpoint appears.

2) Press the up or down button until the desired value is displayed. After a few seconds, the display returns to the current cabinet temperature and the temperature setpoint is saved. ***NOTICE!*** **Do not adjust the temperature setpoint more than 2°F (1°C) at a time. Allow the temperature to stabilize for a minimum of 8 hours before making further temperature setpoint adjustments.**

- For refrigerators, the temperature setpoint is adjustable between 31°F and 52°F (-0.5°C and 11°C). The factory default is 38°F (3°C).
- For freezers, the temperature setpoint is adjustable between -10°F and +12°F (-24°C and -11°C). The factory default is -2°F (-19°C).

3. Changing the Temperature Display Scale (°F or °C)

To change the temperature display scale, press and hold either the up or down button for 5 seconds. The factory default is °F.

H. Defrost

To initiate a manual defrost, press the manual defrost button briefly. The defrost icon and "dEF" appear on the display.

1. Refrigerators

Refrigerators use a time-initiated, off-cycle defrost. Defrost occurs when either the 2-hr. cumulative compressor run timer terminates or the 2-hr. continuous compressor run timer terminates. When either the 2-hr. cumulative compressor run timer or the 2-hr. continuous compressor run timer terminates, defrost begins. The 5-min. minimum defrost timer and the 1-hr. maximum defrost timer starts. If energized the compressor de-energizes and the evaporator fan motor continues. Cabinet temperature is not displayed during defrost; "dEF" is displayed in its place along with defrost icon. After the 5-min. minimum defrost timer terminates and the defrost thermistor warms to 44°F (6.6°C), defrost terminates. The defrost icon turns off and the compressor energizes. "dEF" is displayed during defrost and continues for 15 min. after defrost termination. Once the 15-min. "dEF" display timer terminates, cabinet temperature returns to the display. Note: If the defrost thermistor is above 50°F (10°C) the evaporator fan motor de-energizes until the defrost thermistor reaches 49°F (9°C).

2. Freezers

Freezers use a time-initiated, heated defrost. Defrost occurs when either the 5-hr. cumulative compressor run timer terminates or the 4-hr continuous compressor run timer terminates. When either the 5 hr. cumulative compressor run timer or the 4-hr continuous run timer terminates, defrost begins. The 5-min. minimum defrost timer and the 1-hr. maximum defrost timer starts. Cabinet temperature is not displayed during defrost; "dEF" is displayed in its place along with the defrost icon. After the 5-min. minimum defrost timer terminates and the defrost thermistor warms to 77°F (25°C), defrost terminates (defrost heater de-energizes). A 3-min. compressor delay timer starts. Once the 3-min. compressor delay timer terminates, the compressor energizes and a 4-min. evaporator fan motor delay timer (drip time) starts. Once the 4-min. evaporator fan motor delay timer (drip time) terminates, the evaporator fan motor energizes, the defrost icon turns off, and the 15-min. temperature display delay timer starts. Once the 15-min. temperature display delay timer terminates, cabinet temperature is displayed. Note that the 4-min. evaporator fan motor delay time is a maximum; if the defrost thermistor cools to 15°F (-9.5°C) before the 4-min. evaporator fan motor delay timer terminates, the evaporator fan motor will energize. Freezers have a minimum defrost interval of 5 hours.

3. Manual Defrost

To initiate a manual defrost, press the manual defrost button.

I. Alarm Safeties

Alarm signals are designed to protect the appliance and food product. These alarms give information or warnings in the event the appliance is operating out of acceptable parameters. Should one of the alarms occur, follow the instructions in the table below to address the alarm. The alarm code and alarm icon flash with audible alarm. To silence the alarm, press and release the upper button.

Alarm Signals		
Alarm Code	**Problem**	**Corrective Action/Reset Details**
dor	Door Switch Alarm: Door has remained open for more than 2 minutes. Door Switch has failed	If obvious corrections such as closing doors does not correct the alarm, call a qualified service technician. Beeps for 10 seconds, then silent for 50 seconds. To silence the alarm, press and release the up button.
E01	Cabinet Thermistor Malfunction Alarm Cabinet thermistor has failed.	Call a qualified service technician. Beeps for 10 seconds, then silent for 50 seconds. To silence the alarm, press and release the up button. Appliance cycles 5 min. on, 5 min. off.
E02	Defrost Thermistor Malfunction Alarm Defrost thermistor has failed.	Call a qualified service technician. Beeps for 10 seconds, then silent for 50 seconds. To silence the alarm, press and release the up button. Appliance cycles on and off with cabinet thermistor.
Hi	High Temperature Alarm **Refrigerator:** Cabinet temperature has remained above 57°F (13.9°C) for more than 2 hours. **Freezer:** Cabinet temperature has remained above 26°F (-3.3°C) for more than 2 hours.	If obvious corrections such as closing doors and cleaning the air filter and/or condenser do not bring temperature back in range, call a qualified service technician. Beeps for 10 seconds, then silent for 50 seconds. To silence the alarm and clear "Hi" from the display, press and release the up button. The alarm icon stays on. Automatically resets when temperature returns to normal.
Lo	Low Temperature Alarm **Refrigerator:** Cabinet temperature has remained below 26°F (-3.3°C) for more than 2 hours. **Freezer:** Cabinet temperature has remained below -23°F (-30.6°C) for more than 2 hours.	If obvious corrections do not bring the temperature back in range, call a qualified service technician. Beeps for 10 seconds, then silent for 50 seconds. To silence the alarm and clear "Lo" from the display, press and release the up button. The alarm icon stays on. Automatically resets when temperature returns to normal.

J. Safety Devices and Light Control

1. Compressor External or Internal Protector

If combined temperature/amperage value is above the limit specified by the compressor manufacturer, the compressor overload operates independently to turn off the compressor. The compressor overload de-energizes the compressor until the temperature/amperage value returns to an acceptable level.

2. Short-Cycle Protection

There is a 2-min. minimum off-time and on-time for the compressor.

Note: Time may vary with compressor protector or high-pressure switch activation.

3. High-Pressure Switch

If pressure on the high-side of the appliance exceeds Hoshizaki specifications, the high-pressure switch activates and interrupts the compressor circuit, de-energizing the compressor until the pressure returns to an acceptable level.

If the condenser fan motor is operating and the compressor is off, it is most likely that the compressor protector opened. If both the compressor and condenser fan motor are off, it is most likely the appliance is off or the high-pressure switch has opened.

4. Light Control for Glass Door Models

Glass door models feature lights that are controlled by the standby/light control button located on the control module. Press and release the standby/light button to turn the light on or off.

K. Mullion/Perimeter Heater

Refrigerators are equipped with mullion heaters and the freezers are equipped with mullion and perimeter heaters. The heaters are energized (except PT2A and R_2A models) when the appliance is plugged into the electrical outlet. Mullion heater energizes with compressor and condensor fan motor on PT2A and R_2A models.

IV. Refrigeration Circuit and Component Service Information

R-290 Class A3 Flammable Refrigerant Used

⚠ DANGER

Risk of Fire or Explosion. Flammable Refrigerant Used.

- Be sure to follow all Important Safety Information located at the beginning of this manual and at the beginning of section "III.A. Safety Precautions When Servicing."
- Servicing shall be done by trained service personnel with certified competence in handling flammable refrigerants to minimize the risk of possible ignition due to incorrect parts or improper service.
- Confirm that capacitors are discharged: this shall be done in a safe manner to avoid possibility of sparking.
- A dry chemical or CO_2 fire extinguisher should be adjacent to the charging area. You must have a Class B chemical fire extinguisher available at all times.
- When breaking into the refrigerant circuit to make repairs – or for any other purpose – conventional procedures shall be used. However, for flammable refrigerants it is important that best practice be followed, since flammability is a consideration. The following procedure shall be adhered to:
  - safely remove refrigerant following local and national regulations
  - purge the circuit with inert gas
  - evacuate (optional for A2L)
  - purge with inert gas (optional for A2L)
  - open the circuit by cutting
- Confirm that no live electrical components and wiring are exposed while charging, recovering, or purging the system.
- You must have a combustible gas leak detector in the immediate work area at all times.
- Be sure the area is clear of refrigerant vapor before brazing.
- The refrigerant charge shall be recovered into the correct recovery cylinders if venting is not allowed by local and national codes. For appliances containing flammable refrigerants, the system shall be purged with oxygen-free nitrogen to render the appliance safe for flammable refrigerants. This process might need to be repeated several times. Compressed air or oxygen shall not be used for purging refrigerant systems.

⚠ DANGER Continué

Risque De Feu Ou D'Explosion. Fluide Frigorigène Inflammable Utilisé.

- Assurez-vous de suivre toutes les informations importantes de sécurité qui se trouvent au début du présent manuel et au début de la section «III.A. Précautions de sécurité lors de l'entretien.»
- L'entretien doit être effectué par du personnel formé et certifié pour la manipulation de réfrigérants inflammables afin de réduire au minimum le risque d'inflammation dû à des pièces incorrectes ou à un entretien inadéquat.
- S'assurer que les condensateurs sont déchargés : cette opération doit être effectuée en toute sécurité afin d'éviter tout risque d'étincelle.
- Un extincteur à poudre chimique ou à CO_2 devrait être installé à proximité de la zone de chargement. Un extincteur chimique de classe B doit être disponible à tout moment.
- Pour pénétrer dans le circuit du réfrigérant afin d'effectuer des réparations ou pour toute autre raison, des procédures conventionnelles doivent être utilisées. Toutefois, pour les réfrigérants inflammables, il est important de suivre les meilleures pratiques, car l'inflammabilité est un facteur à prendre en considération. La procédure suivante doit être respectée:
  - éliminer le réfrigérant en toute sécurité conformément aux réglementations locales et nationales
  - purger le circuit avec du gaz inerte
  - évacuer (en option pour A2L)
  - purger avec du gaz inerte (en option pour A2L)
  - ouvrir le circuit par coupure
- S'assurer qu'aucun composant ou câblage électrique sous tension n'est exposé lors de la charge, de la récupération ou de la purge du système.
- Un détecteur de fuites de gaz combustible doit se trouver à tout moment dans la zone de travail immédiate.
- Assurez-vous que la zone est exempte de vapeur de réfrigérant avant de procéder au brasage.
- La charge de réfrigérant doit être récupérée dans les bouteilles de récupération appropriées si la ventilation n'est pas autorisée par les normes locales et nationales. Pour les appareils contenant des réfrigérants inflammables, le système doit être purgé avec de l'azote sans oxygène afin de rendre l'appareil inoffensif pour les réfrigérants inflammables. Cette procédure peut être répétée plusieurs fois. L'air comprimé ou l'oxygène ne doivent pas être utilisés pour la purge des systèmes de réfrigération.

A. Refrigeration Circuit Service Information

⚠ DANGER

Risk of Fire or Explosion. Flammable Refrigerant Used.

- Follow handling instructions carefully in compliance with U.S. government regulations.
- Do not use mechanical devices to defrost.
- Do not puncture refrigerant tubing. Risk of fire or explosion due to puncture of refrigerant tubing; follow handling instructions carefully.
- Component parts shall be replaced with like components.
- Servicing shall be done by factory authorized service personnel to minimize the risk of possible ignition due to incorrect parts or improper service.
- Consult instruction manual/service manual before attempting to install or service this product.
- Dispose of properly in accordance with federal or local regulations.
- Do not place any potential ignition sources in or near the appliance.

Risque De Feu Ou D'Explosion. Fluide Frigorigène Inflammable Utilisé.

- Suivre attentivement les instructions de manipulation conformément à la réglementation gouvernementale.
- Ne pas utiliser d'appareils mécaniques pour dégivrer le réfrigérateur.
- Ne pas perforer la tubulure contenant le frigorigène. Risque de feu ou d'explosion si la tubulure contenant le frigorigène est perforée; suivre les instructions de manutention avec soin.
- Les pièces des composants doivent être remplacées par des pièces et accessoires équivalents.
- L’entretien doit être effectué par le personnel de service autorisé par le fabricant afin de minimiser les risques d’inflammation attribuables à l’installation d’une pièce inadéquate ou à la mauvaise exécution du service.
- Consulter le manuel du propriétaire/guide de réparation avant de tenter une réparation. Toutes les mesures de sécurité doivent être respectées.
- Éliminer conformément aux règlements fédéraux ou locaux.
- Ne placez aucune source d’inflammation potentielle dans ou près de l’appareil.

⚠ WARNING

- Wear appropriate personal protective equipment (PPE) when servicing the appliance.
- Technician must utilize a combustible gas leak detector at all times.
- Notify everyone in the immediate area that you are working with flammable refrigerant.
- Do not work on appliance in a confined space. Confirm area is well ventilated.
- Identify and eliminate all possible ignition points in a 10 ft. (3 m) area around service area.
- Do not use mechanical devices to defrost.
- Use non-sparking tools.
- Class B dry chemical fire extinguisher or equivalent must be available.
- Do not pressurize system above 200 PSIG during leak check procedure or prior to evacuating refrigeration system.
- This appliance should be diagnosed and repaired only by qualified service personnel to reduce the risk of death, electric shock, serious injury, or fire.
- To reduce the risk of electric shock, do not touch the plug with damp hands.
- Unplug the appliance from the electrical outlet before servicing.
- Make sure all food zones in the appliance are clean after the appliance is serviced.

Refrigerant leaks must be repaired as soon as they are discovered. If not, refrigerant charge should be recovered from the system until the leak can be repaired.
When repairing a leak:

- Repair the leak properly – Remove the refrigerant, examine the leak source, determine the reason for the leak, and carry out the proper course of action.
- Before repairing the leak, ensure that the refrigerant has been recovered and the system purged with nitrogen when brazing.
- Be sure to remove piercing valves attached to the system after repairs are made.

a) Refrigerant Recovery

Using proper refrigerant practices, place piercing valves toward the end (crimped area) of the high and low-side process tubes, then recover the refrigerant into an approved container or device.

1) Unplug the appliance from the electrical outlet.

b) Brazing

2) Prior to brazing, purge with nitrogen gas for 2 min., flowing at a pressure of 3 to 5 PSIG.
⚠ DANGER! For appliances containing flammable refrigerants, the system shall be purged with oxygen-free nitrogen to render the appliance safe for flammable refrigerants. This process might need to be repeated several times. Compressed air or oxygen shall not be used for purging refrigerant systems.

3) Braze/repair/replace damaged component or fittings while purging with nitrogen gas, flowing at a pressure of 3 to 5 PSIG.

4) Use soap bubbles to check for leaks. Raise the pressure using nitrogen gas (190 PSIG). Do not use any refrigerant as a mixture with pressurized air for leak testing.

5) Once leak checking is complete, release the nitrogen gas from the system.

c) Evacuation

6) Attach a vacuum pump to the system. Be sure the high-side charging hose is connected to the field-installed high-side access valve.

IMPORTANT
The vacuum level and vacuum pump may be the same as those for current refrigerants. However, the rubber hose and gauge manifold to be used for evacuation and refrigerant charge should be exclusively for POE oils.

7) Turn on the vacuum pump, then open the high-side valve on the gauge manifold. Never allow the oil in the vacuum pump to flow backwards.

8) Allow the vacuum pump to pull down to a 29.9" Hg vacuum. Evacuating period depends on pump capacity.

9) Close the high-side valve on the gauge manifold.

10) Disconnect the gauge manifold hose from the vacuum pump and attach it to a refrigerant service cylinder. Remember to loosen the connection and purge the air from the hose. See the nameplate for the required refrigerant charge. Hoshizaki recommends only virgin refrigerant or reclaimed refrigerant which meets the requirements of AHRI Standard 700 (latest edition) be used.

d) Recharge

⚠ DANGER

- In addition to conventional charging procedures, the following requirements shall be followed:
  - Ensure that contamination of different refrigerants does not occur when using charging equipment. Hoses or lines shall be as short as possible to minimize the amount of refrigerant contained in them.
  - Cylinders shall be kept in an appropriate position according to the instructions.
  - Ensure that the refrigerating system is earthed (grounded) prior to charging the system with refrigerant.
  - Label the system when charging is complete (if not already).
  - Extreme care shall be taken not to overfill the refrigerating system.
- The system shall be leak-tested on completion of charging but prior to commissioning. A follow up leak test shall be carried out prior to leaving the site.

- En plus des procédures de charge conventionnelles, les exigences suivantes doivent être respectées :
  - S'assurer qu'aucune contamination de différents réfrigérants ne se produit lors de l'utilisation de l'équipement de charge. Les tuyaux ou conduites doivent être aussi courts que possible afin de minimiser la quantité de réfrigérant qu'ils contiennent.
  - Les bouteilles doivent être maintenues dans une position appropriée conformément aux instructions.
  - S'assurer que le système de réfrigération soit mis à la terre avant de charger le système avec du réfrigérant.
  - Étiqueter le système lorsque la charge est terminée (si cela n'a pas déjà été fait).
  - Il faut veiller à ne pas trop remplir le système de réfrigération.
- Avant de recharger le système, celui-ci doit être testé sous pression avec le gaz de purge approprié. Le système doit être soumis à un essai de fuite à la fin de la charge, mais avant la mise en service. Un test de contrôle de fuite doit être effectué avant de quitter le site.

11) R-290 can be charged in either the liquid or vapor state. Liquid charge is preferred. If refrigerant charging is done in the liquid state, place the service cylinder on the scales; **if the service cylinder is not equipped with a dip tube, invert the service cylinder, then place it on the scales.** Open the high-side valve on the gauge manifold

12) Allow the system to charge with liquid until the proper charge weight is met.

13) Close the high-side valve on the gauge manifold. If charging is complete, skip to step 15.

14) If necessary, add any remaining charge to the system through the low-side.
***4OTICE!* To prevent compressor damage, use a throttling valve or liquid dispensing device to add the remaining liquid charge through the low-side refrigerant access valve with the compressor running.** Close the refrigerant cylinder valve and let the low-side refrigerant equalize to the system, then close the low-side manifold gauge.

15) Pinch off (crimp down) the process tubes just below the piercing valves.

16) Remove the piercing valves. Cut the process tubes to remove the piercing valve holes.

17) Confirm there are no leaks from the pinched off process tubes, then braze the process tubes closed. ⚠ **DANGER! Be sure there is no refrigerant leak before brazing.**

18) Use a combustible gas leak detector or soap bubbles to check for leaks again.

19) Place red sleeves over the process tubes.

20) Plug the appliance back into the electrical outlet.

B. Component Service Information

⚠ DANGER

Risk of Fire or Explosion. Flammable Refrigerant Used.

- Component parts shall be replaced with like components. So as to minimize the risk of possible ignition due to incorrect parts.
- This appliance should be diagnosed and repaired only by qualified service personnel to reduce the risk of death, electric shock, serious injury, or fire.
- Repair and maintenance to electrical components shall include initial safety checks and component inspection procedures. If a fault exists that could compromise safety, then no electrical supply shall be connected to the circuit until it is satisfactorily dealt with. If the fault cannot be corrected immediately but it is necessary to continue operation, an adequate temporary solution shall be used. This shall be reported to the owner of the equipment, so all parties are advised.
- Confirm that capacitors are discharged: this shall be done in a safe manner to avoid possibility of sparking.
- Confirm that no live electrical components and wiring are exposed while charging, recovering, or purging the system.
- Confirm that there is continuity of earth bonding (grounding).

⚠ DANGER Continué

Risque D'Incendie ou D'Explosion. Fluide Frigorigène Inflammable Utilisé.

- Les pièces doivent être remplacées par des pièces similaires, de manière à réduire au minimum le risque d'inflammation dû à des pièces incorrectes.
- Cet appareil ne doit être diagnostiqué et réparé que par un personnel qualifié afin de réduire les risques de mort, d'électrocution, de blessures graves ou d'incendie.
- La réparation et l'entretien des composants électriques incluent les contrôles de sécurité initiaux et les procédures d'inspection des composants. En cas de défaut susceptible de compromettre la sécurité, aucune alimentation électrique ne doit être connectée au circuit tant que le problème n'a pas été résolu de manière satisfaisante. Si le défaut ne peut être corrigé immédiatement mais qu'il est nécessaire de poursuivre l'exploitation, une solution temporaire adéquate doit être utilisée. Cela doit être signalé au propriétaire de l'équipement, afin que toutes les parties soient informées.
- S'assurer que les condensateurs sont déchargés : cette opération doit être effectuée en toute sécurité afin d'éviter tout risque d'étincelle.
- S'assurer qu'aucun composant ou câblage électrique sous tension n'est exposé lors de la charge, de la récupération ou de la purge du système.
- S'assurer de la continuité de la mise à la terre.

NOTICE
When replacing a component listed below, see the notes to help ensure proper operation.

Component	Notes
Compressor	Install a new start relay and compressor external protector. **WARNING! To reduce the risk of electric shock, be sure to reconnect the compressor's ground wire.**
Thermostatic Expansion Valve	• Attach the thermostatic expansion valve bulb to the suction line in the same location as the previous bulb. • The bulb should be between the 10 and 2 o'clock positions on the tube. • Secure the bulb with the clamp and holder.
Defrost Thermistor	After working with or around the defrost thermistor on a freezer, make sure the defrost thermistor wire is not touching the defrost heater.

C. Door Reversal

The appliance is provided with a cabinet design which, after being delivered to the installation location, permits changing of the door swing from left to right or right to left. To change the door swing, See Instruction Manual "II.F. Door Reversal".

NOTICE! **Improper installation may result in the doors not closing completely and/or the gaskets not sealing correctly**. For further details, contact your local Hoshizaki distributor or Hoshizaki Technical Support at 1-800-233-1940.

V. Maintenance

⚠ WARNING

- Unplug the appliance before performing maintenance to prevent electric shock or injury by moving parts. To reduce the risk of electric shock, do not touch the plug with damp hands.
- Before performing maintenance, move all foods into another clean refrigerator or freezer.

1. Air Filter

Check the air filter at least twice a month. When clogged, use warm water and a neutral cleaner to wash the filter.

2. Condenser

Inspect the condenser air filter bi-weekly. Wash with warm water and neutral cleaner if dirty. Check the condenser once a year and use a brush or vacuum cleaner to clean the condenser as required.

3. Condensate Wick (Except DT1A-HS and Freezer on DT2A-FS)

The condensate wick must be cleaned at least once a year. More frequent cleaning may be required in some conditions to maintain proper flow. Follow the steps below.

1) Unplug the appliance from the electrical outlet. WARNING! To reduce the risk of electric shock, do not touch the plug with damp hands.
2) Remove the wick from the retainers.
3) Clean or replace the wick. ***NOTICE!*** If the wick is clogged/deteriorating replace.
4) Replace the wick in its correct position.
   NOTICE! Be sure the wick is positioned into the condensate pan.
5) Plug the appliance back in.

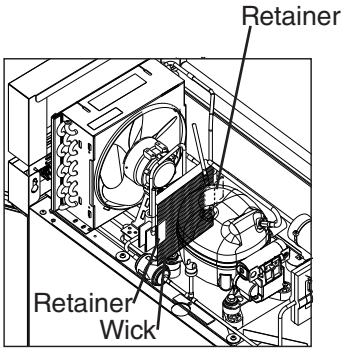

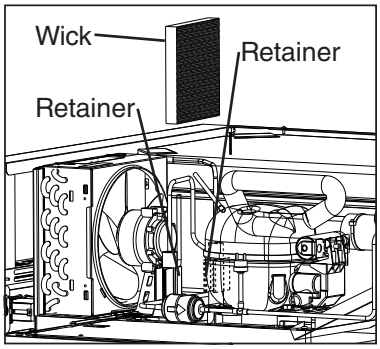

Fig. 1

4. Power Supply Connection

If the plug or power cord is damaged, contact your local Hoshizaki service representative or local Hoshizaki distributor immediately and ask for repairs.

All other maintenance or service on this appliance should be performed in accordance with the Hoshizaki Instruction Manual by a qualified service technician.

VI. Preparing the Appliance for Periods of Non-Use

⚠ DANGER

Risk of Fire or Explosion. Flammable Refrigerant Used.

- Be sure to follow all Important Safety Information located at the beginning of this manual and at the beginning of section "III.A. Safety Precautions When Servicing."
- Only qualified service technicians should service this appliance.
- The appliance shall be stored in an area where the room size corresponds to the room area as specified for operation. See the nameplate or instruction manual for Minimum Room Floor Area.
- The appliance shall be stored in a room without continuously operating open flames (for example an operating gas appliance) or other potential ignition sources (for example an operating electric heater, hot surfaces).

Risque D'Incendie ou D'Explosion. Fluide Frigorigène Inflammable Utilisé.

- Assurez-vous de suivre toutes les informations importantes de sécurité qui se trouvent au début du présent manuel et au début de la section «III.A. Précautions de sécurité lors de l'entretien.»
- Seuls des techniciens de service qualifiés doivent installer et entretenir l'appareil.
- L'appareil doit être conservé dans une zone où la taille de la pièce correspond à la surface de la pièce spécifiée pour le fonctionnement.
- L'appareil doit être entreposé dans un local ne contenant pas de sources d'inflammation permanentes (flammes nues, appareil à gaz ou dispositif de chauffage électrique en fonctionnement, par exemple).

⚠ WARNING

When preparing the appliance for long storage, prevent the drawers from closing to reduce the risk of children getting trapped.

NOTICE

When preparing the appliance for long storage, clean the appliance. See the instruction manual for cleaning details.

1) Before shutting down the appliance, move all foods into another clean refrigerator.
2) Unplug the appliance. **WARNING! To reduce the risk of electric shock, do not touch the plug with damp hands.**

VII. Decommissioning and Disposal

R-290 Class A3 Flammable Refrigerant Used

⚠ DANGER

Risk of Fire or Explosion. Flammable Refrigerant Used.

- Be sure to follow all Important Safety Information located at the beginning of this manual and at the beginning of section "III.A. Safety Precautions When Servicing."
- Servicing shall be done by trained service personnel with certified competence in handling flammable refrigerants to minimize the risk of possible ignition due to improper service.
- Follow handling instructions carefully in compliance with national regulations.
- Dispose of properly in accordance with federal or local regulations.
- Do not puncture refrigerant tubing. Risk of fire or explosion due to puncture of refrigerant tubing; follow handling instructions carefully.
- When removing refrigerant from a system, either for servicing or decommissioning, it is recommended good practice that all refrigerants are removed safely.
- When transferring refrigerant into cylinders, ensure that only appropriate refrigerant recovery cylinders are employed. Ensure that the correct number of cylinders for holding the total system charge is available. All cylinders to be used are designated for the recovered refrigerant and labeled for that refrigerant (i.e., special cylinders for the recovery of refrigerant). Cylinders shall be complete with pressure-relief valve and associated shut-off valves in good working order. Empty recovery cylinders are evacuated and, if possible, cooled before recovery occurs.
- The recovery equipment shall be in good working order with a set of instructions concerning the equipment that is at hand and shall be suitable for the recovery of all appropriate refrigerants including, when applicable, flammable refrigerants.
  In addition, a set of calibrated weighing scales shall be available and in good working order. Hoses shall be complete with leak-free disconnect couplings and in good condition. Before using the recovery machine, check that it is in satisfactory working order, has been properly maintained and that any associated electrical components are sealed to prevent ignition in the event of a refrigerant release. Consult manufacturer if in doubt.
- The recovered refrigerant shall be returned to the refrigerant supplier in the correct recovery cylinder, and the relevant waste transfer note arranged. Do not mix refrigerants in recovery units and especially not in cylinders.
- If compressors or compressor oils are to be removed, ensure that they have been evacuated to an acceptable level to make certain that flammable refrigerant does not remain within the lubricant. The evacuation process shall be carried out prior to returning the compressor to the suppliers. Only electric heating to the compressor body shall be employed to accelerate this process. When oil is drained from a system, it shall be carried out safely.

⚠ DANGER Continué

Risque D'Incendie ou D'Explosion. Fluide Frigorigène Inflammable Utilisé.

- Assurez-vous de suivre toutes les informations importantes de sécurité qui se trouvent au début du présent manuel et au début de la section «III.A. Précautions de sécurité lors de l'entretien.»
- L'entretien doit être effectué par du personnel formé et certifié pour la manipulation de réfrigérants inflammables afin de réduire au minimum le risque d'inflammation dû à un entretien inadéquat.
- Suivre attentivement les instructions de manutention conformément aux réglements nationaux.
- Mettre au rebut conformément aux conformément aux réglements fédéraux ou locaux.
- Ne pas perforer la conduite de fluide frigorigène. Risque d'incendie ou d'explosion en cas de perforation d'une canalisation de fluide frigorigène; suivez attentivement les instructions de manutention.
- Lors de l'élimination du réfrigérant d'un système, que ce soit pour l'entretien ou la mise hors service, il est recommandé de veiller à ce que tous les réfrigérants soient éliminés en toute sécurité.
- Lors du transfert de réfrigérant dans des bouteilles, veillez à ce que seules des bouteilles de récupération de réfrigérant appropriées soient utilisées. Assurez-vous que le nombre de bouteilles nécessaires pour contenir la charge totale du système est disponible. Toutes les bouteilles à utiliser sont désignées pour le réfrigérant récupéré et étiquetées pour ce réfrigérant (c'est-à-dire des bouteilles spéciales pour la récupération du réfrigérant). Les bouteilles doivent être équipées d'une soupape de surpression et de soupapes d'arrêt associées en bon état de fonctionnement. Les bouteilles de récupération vides sont évacuées et, si possible, refroidies avant la récupération.
- L'équipement de récupération doit être en bon état de fonctionnement, accompagné d'un ensemble d'instructions concernant l'équipement disponible et doit être adapté à la récupération de tous les réfrigérants appropriés, y compris, le cas échéant, les réfrigérants inflammables. En outre, un ensemble de balances étalonnées doit être disponible et en bon état de fonctionnement. Les tuyaux doivent être complets, équipés de raccords de déconnexion sans fuite et en bon état. Avant d'utiliser la machine de récupération, vérifiez qu'elle est en bon état de fonctionnement, qu'elle a été correctement entretenue et que tous les composants électriques associés sont scellés pour éviter toute inflammation en cas de fuite de réfrigérant. Consulter le fabricant en cas de doute.
- Le réfrigérant récupéré doit être renvoyé au fournisseur de réfrigérant dans la bouteille de récupération appropriée et le bon de transfert de déchets correspondant doit être établi. Ne mélangez pas les réfrigérants dans les unités de récupération et surtout pas dans les bouteilles.
- Si les compresseurs ou les huiles de compresseur doivent être retirés, assurez-vous qu'ils ont été évacués à un niveau acceptable afin de s'assurer qu'il ne reste pas de réfrigérant inflammable dans le lubrifiant. Le processus d'évacuation doit être effectué avant que le compresseur ne soit renvoyé aux fournisseurs. Seul le chauffage électrique du boîtier du compresseur doit être utilisé pour accélérer ce processus. Lorsque l'huile est vidangée d'un système, cette opération doit être effectuée en toute sécurité.

The appliance contains refrigerant and must be disposed of in accordance with applicable national, state, and local codes and regulations. Refrigerant must be recovered and safely disposed of by properly trained service personnel.

Before carrying out this procedure, it is essential that the technician is completely familiar with the equipment and all its detail. It is recommended good practice that all refrigerants are recovered safely. Prior to the task being carried out, an oil and refrigerant sample shall be taken in case analysis is required prior to re-use of recovered refrigerant. It is essential that electrical power is available before the task is commenced.

- Become familiar with the equipment and its operation.
- Isolate the system electrically.
- **Before attempting the procedure, ensure that:**
  - mechanical handling equipment is available, if required, for handling refrigerant cylinders
  - all personal protective equipment is available and being used correctly
  - the recovery process is supervised at all times by a competent person
  - recovery equipment and cylinders conform to the appropriate standards
- Pump down refrigerant system, if possible.
- If a vacuum is not possible, make a manifold so that refrigerant can be removed from various parts of the system.
- Make sure that cylinder is situated on the scales before recovery takes place.
- Start the recovery machine and operate in accordance with instructions.
- Do not overfill cylinders (no more than 80% volume liquid charge).
- Do not exceed the maximum working pressure of the cylinder, even temporarily.
- When the cylinders have been filled correctly and the process completed, make sure that the cylinders and the equipment are removed from site promptly and all isolation valves on the equipment are closed off.
- Recovered refrigerant shall not be charged into another refrigerating system unless it has been cleaned and checked.

Follow the steps below for decommissioning and disposal:

1. Recovery

1) Recover the refrigerant, and safely dispose of the refrigerant.
2) Evacuate the appliance.
3) Purge the refrigeration system with nitrogen.
4) Cut out the compressor and drain and dispose of the compressor oil. Compressor oils are to be removed, ensure that they have been evacuated to an acceptable level to make certain that flammable refrigerant does not remain within the lubricant. Dispose of compressor and compressor oil in compliance with national, state, and local codes and regulations.
5) Purge the refrigeration system with nitrogen.

2. Labeling

Equipment shall be labeled stating that it has been decommissioned and emptied of refrigerant. The label shall be dated and signed. For appliances containing flammable refrigerant, ensure that there are labels on the equipment stating the equipment contains flammable refrigerant.

VIII. Technical Information

A. Electrical and Refrigerant Data

Model Number	R1A-FG(-FGE)(-FGCL)(-FGECL)(-FGCR)(-FGECR)(-HG)(-HGE)(-FS)(-FSCL)(-FSCR)(-FSJ)(-FSL)(-FSLJ)(-HS)(-HSL)	R2A-FG(-FGE)(-FGN)(-FGEN)(-HG)(-HGE)(-FS)(-FSC)(-FSN)(-FSP)(-HS)
AC SUPPLY VOLTAGE	~115/60/1	~115/60/1
AMPERES	5	8
DESIGN PRESSURE kPa (PSI)	HI-2482 (360) LO-1310 (190)	HI-2482 (360) LO-1310 (190)
REFRIGERANT g (oz.)	R-290 130 (4.6)	R-290 140 (4.9)
CLIMATIC CLASS	5	5
INSULATION BLOWING GAS	HFO 1233zd(E)	HFO 1233zd(E)
MINIMUM ROOM FLOOR AREA m² (ft²)	6.2 (67)	6.7 (72.1)

Model Number	R3A-FS(-FSCL)(-FSCR)(-HS)
AC SUPPLY VOLTAGE	~115/60/1
AMPERES	9.5
DESIGN PRESSURE kPa (PSI)	HI-2482 (360) LO-1310 (190)
REFRIGERANT g (oz.)	R-290 130 (4.6)
CLIMATIC CLASS	5
INSULATION BLOWING GAS	HFO 1233zd(E)
MINIMUM ROOM FLOOR AREA m² (ft²)	6.2 (67)

Model Number	PT1A-FG-FG(-FGE-FGE)(-FS-FS)(-HS-HS)	PT2A-FG-FG(-FGE-FGE)(-FS-FS)(-HS-HS)
AC SUPPLY VOLTAGE	~115/60/1	~115/60/1
AMPERES	5	8
DESIGN PRESSURE kPa (PSI)	HI-2482 (360) LO-1310 (190)	HI-2482 (360) LO-1310 (190)
REFRIGERANT g (oz.)	R-290 130 (4.6)	R-290 150 (5.3)
CLIMATIC CLASS	5	5
INSULATION BLOWING GAS	HFO 1233zd(E)	HFO 1233zd(E)
MINIMUM ROOM FLOOR AREA m² (ft²)	6.2 (67)	7.2 (77.3)

Model Number	PTF1A-HGE-HGE(-HS-HS)
AC SUPPLY VOLTAGE	~115/60/1
AMPERES	9
DESIGN PRESSURE kPa (PSI)	HI-2482 (360) LO-1310 (190)
REFRIGERANT g (oz.)	R-290 115 (4.1)
CLIMATIC CLASS	5
INSULATION BLOWING GAS	HFO 1233zd(E)
MINIMUM ROOM FLOOR AREA m² (ft²)	5.5 (59.2)

Model Number	RN1A-FS	RN2A-FS
AC SUPPLY VOLTAGE	~115/60/1	~115/60/1
AMPERES	6.4	8.2
DESIGN PRESSURE kPa (PSI)	HI-2482 (360) LO-1310 (190)	HI-2482 (360) LO-1310 (190)
REFRIGERANT g (oz.)	R-290 130 (4.6)	R-290 145 (5.1)
CLIMATIC CLASS	5	5
INSULATION BLOWING GAS	HFO 1233zd(E)	HFO 1233zd(E)
MINIMUM ROOM FLOOR AREA m² (ft²)	6.2 (67)	6.9 (74.7)

Model Number	RT1A-FS-FS	RT2A-FS-FS
AC SUPPLY VOLTAGE	~115/60/1	~115/60/1
AMPERES	6.4	8.2
DESIGN PRESSURE kPa (PSI)	HI-2482 (360) LO-1310 (190)	HI-2482 (360) LO-1310 (190)
REFRIGERANT g (oz.)	R-290 130 (4.6)	R-290 145 (5.1)
CLIMATIC CLASS	5	5
INSULATION BLOWING GAS	HFO 1233zd(E)	HFO 1233zd(E)
MINIMUM ROOM FLOOR AREA m² (ft²)	6.2 (67)	6.9 (74.7)

Model Number	F1A-FG(-FGE)(-HG)(-HGE)(-FS)(-FSL)(-HS)(-HSL)	F2A-FG(-FGE)(-HG)(-HGE)(-FGN)(-FGEN)(-FS)(-FSN)(-HS)
AC SUPPLY VOLTAGE	~115/60/1	~115/60/1
AMPERES	9	9.5
DESIGN PRESSURE kPa (PSI)	HI-2482 (360) LO-1310 (190)	HI-2482 (360) LO-1310 (190)
REFRIGERANT g (oz.)	R-290 115 (4.1)	R-290 107 (3.8)
CLIMATIC CLASS	5	5
INSULATION BLOWING GAS	HFO 1233zd(E)	HFO 1233zd(E)
MINIMUM ROOM FLOOR AREA m² (ft²)	5.5 (59.2)	5.1 (55.1)

Model Number	F3A-FS(-HS)
AC SUPPLY VOLTAGE	~208-230/115/60/1
AMPERES	11
DESIGN PRESSURE kPa (PSI)	HI-2482 (360) LO-1310 (190)
REFRIGERANT g (oz.)	R-290 115 (4.1)
CLIMATIC CLASS	5
INSULATION BLOWING GAS	HFO 1233zd(E)
MINIMUM ROOM FLOOR AREA m² (ft²)	5.5 (59.2)

Model Number	DT1A-HS	DT2A-FS(-HS)
AC SUPPLY VOLTAGE	~115/60/1	~115/60/1
AMPERES	5.5	14
DESIGN PRESSURE kPa (PSI)	HI-2482 (360) LO-1310 (190)	HI-2482 (360) LO-1310 (190)
FREEZER REFRIGERANT g (oz.)	R-290 67 (2.4)	R-290 115 (4.1)
REFRIGERATOR REFRIGERANT g (oz.)	R-290 60 (2.1)	R-290 130 (4.6)
CLIMATIC CLASS	5	5
INSULATION BLOWING GAS	HFO 1233zd(E)	HFO 1233zd(E)
MINIMUM ROOM FLOOR AREA m^2 (ft^2)	3.2 (34.5)	6.2 (67)

See the nameplate for electrical and refrigerant data. The nameplate is located inside the cabinet. We reserve the right to make changes in specifications and design without prior notice.

B. Wiring Diagrams

1. R1A/R2A/F1A-FG/FGE/FGCL/FGCR/FS/FSJ/FSL/FSLJ/HG/HGE/HS/HSL, PT1A-FG-FG/FGE-FGE/FS-FS/HS-HS

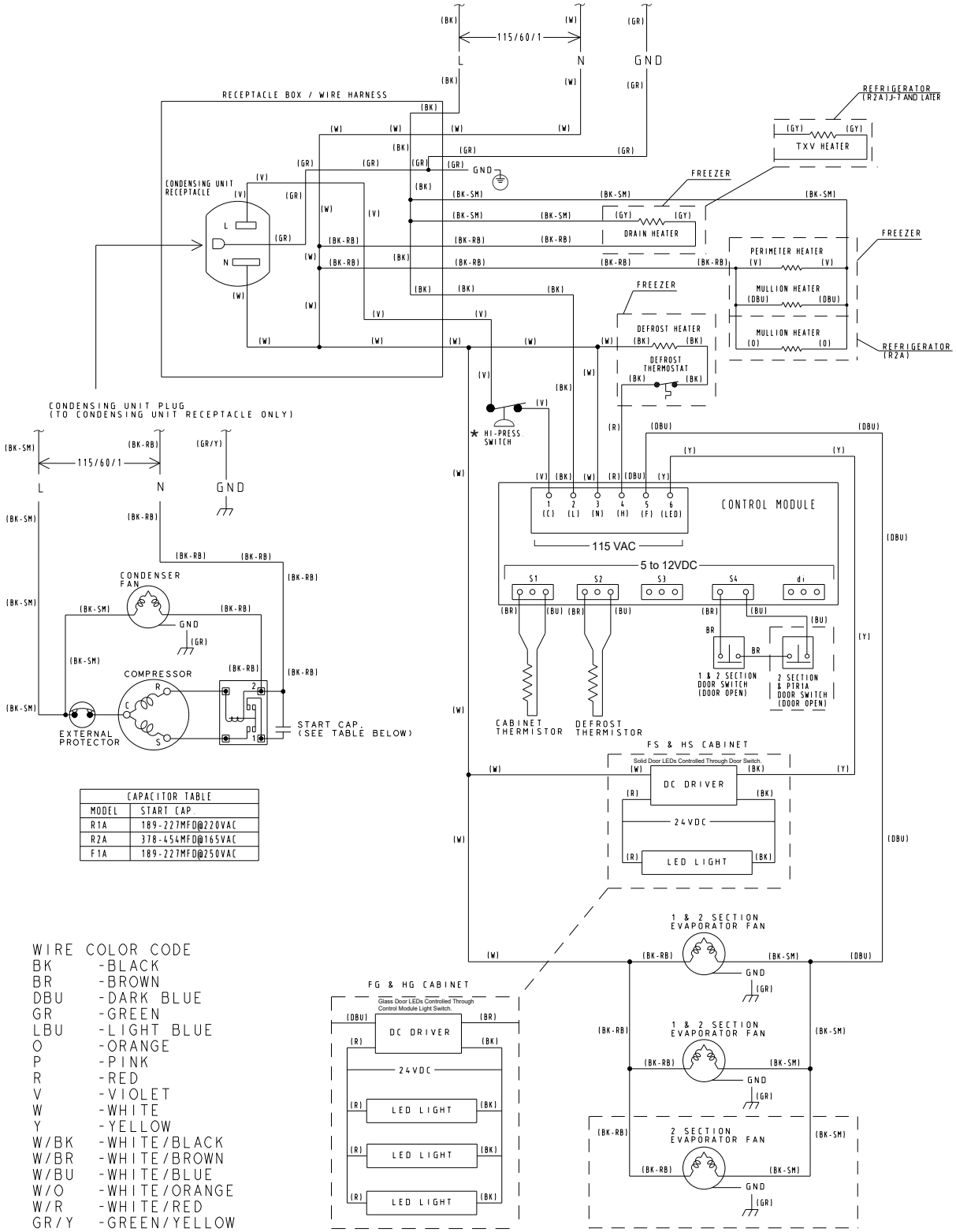

CAPACITOR TABLE	
MODEL	START CAP.
R1A	189-227MFD@220VAC
R2A	378-454MFD@165VAC
F1A	189-227MFD@250VAC

WIRE COLOR CODE

BK	-BLACK
BR	-BROWN
DBU	-DARK BLUE
GR	-GREEN
LBU	-LIGHT BLUE
O	-ORANGE
P	-PINK
R	-RED
V	-VIOLET
W	-WHITE
Y	-YELLOW
W/BK	-WHITE/BLACK
W/BR	-WHITE/BROWN
W/BU	-WHITE/BLUE
W/O	-WHITE/ORANGE
W/R	-WHITE/RED
GR/Y	-GREEN/YELLOW
BK-SM	-BLACK SMOOTH
BK-RB	-BLACK RIBBED

* High-Pressure Switch	
Cut-out	$360\pm^{30}_{0}$PSIG
Cut-in	249±10 PSIG

2. PTF1A-FGE-FGE/-HS-HS

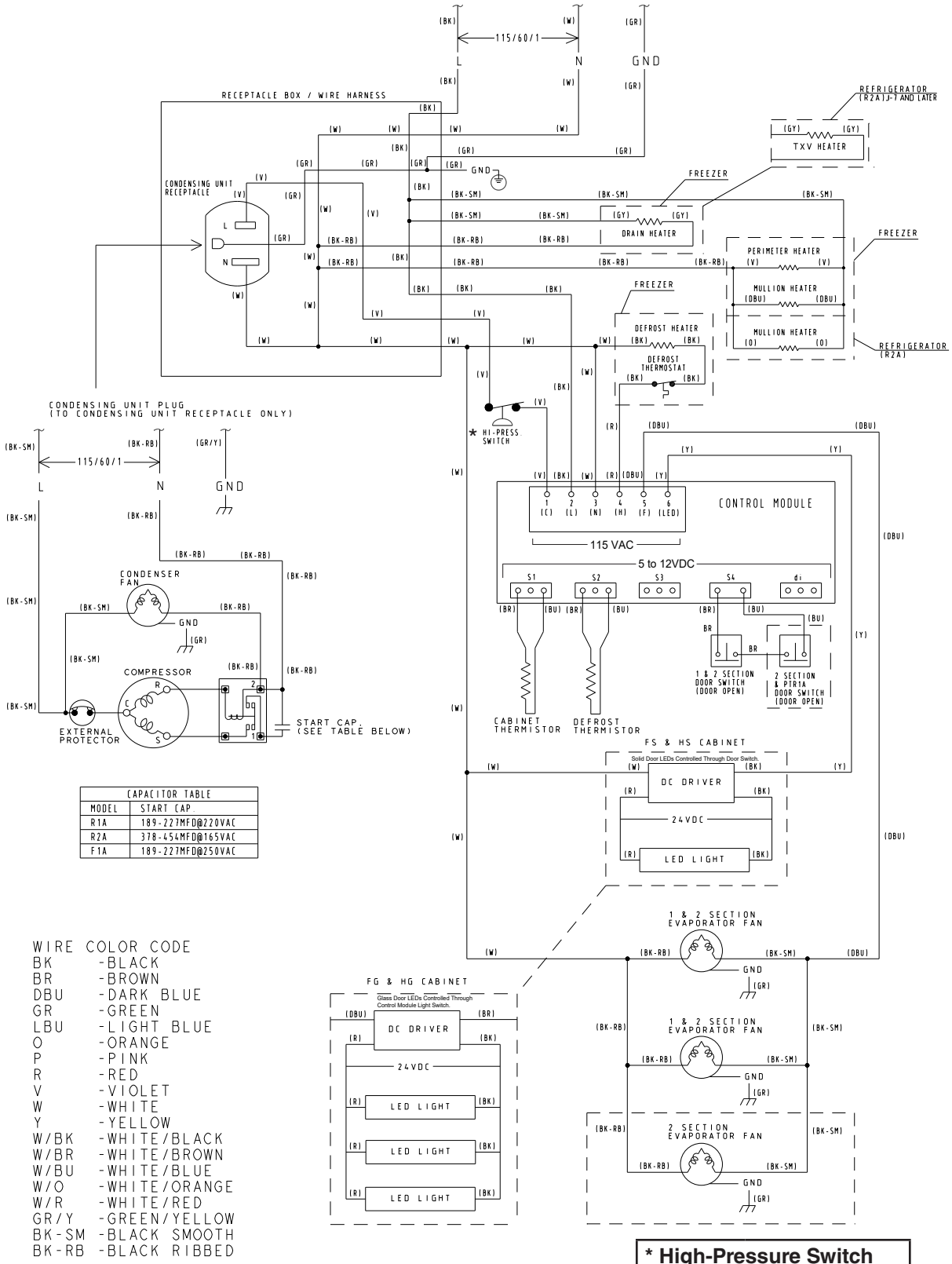

CAPACITOR TABLE	
MODEL	START CAP.
R1A	189-227MFD@220VAC
R2A	378-454MFD@165VAC
F1A	189-227MFD@250VAC

WIRE COLOR CODE

BK	-BLACK
BR	-BROWN
DBU	-DARK BLUE
GR	-GREEN
LBU	-LIGHT BLUE
O	-ORANGE
P	-PINK
R	-RED
V	-VIOLET
W	-WHITE
Y	-YELLOW
W/BK	-WHITE/BLACK
W/BR	-WHITE/BROWN
W/BU	-WHITE/BLUE
W/O	-WHITE/ORANGE
W/R	-WHITE/RED
GR/Y	-GREEN/YELLOW
BK-SM	-BLACK SMOOTH
BK-RB	-BLACK RIBBED

* High-Pressure Switch	
Cut-out	$360\pm^{30}_{0}$PSIG
Cut-in	249±10 PSIG

3. RN1A-FS, RT1A-FS-FS

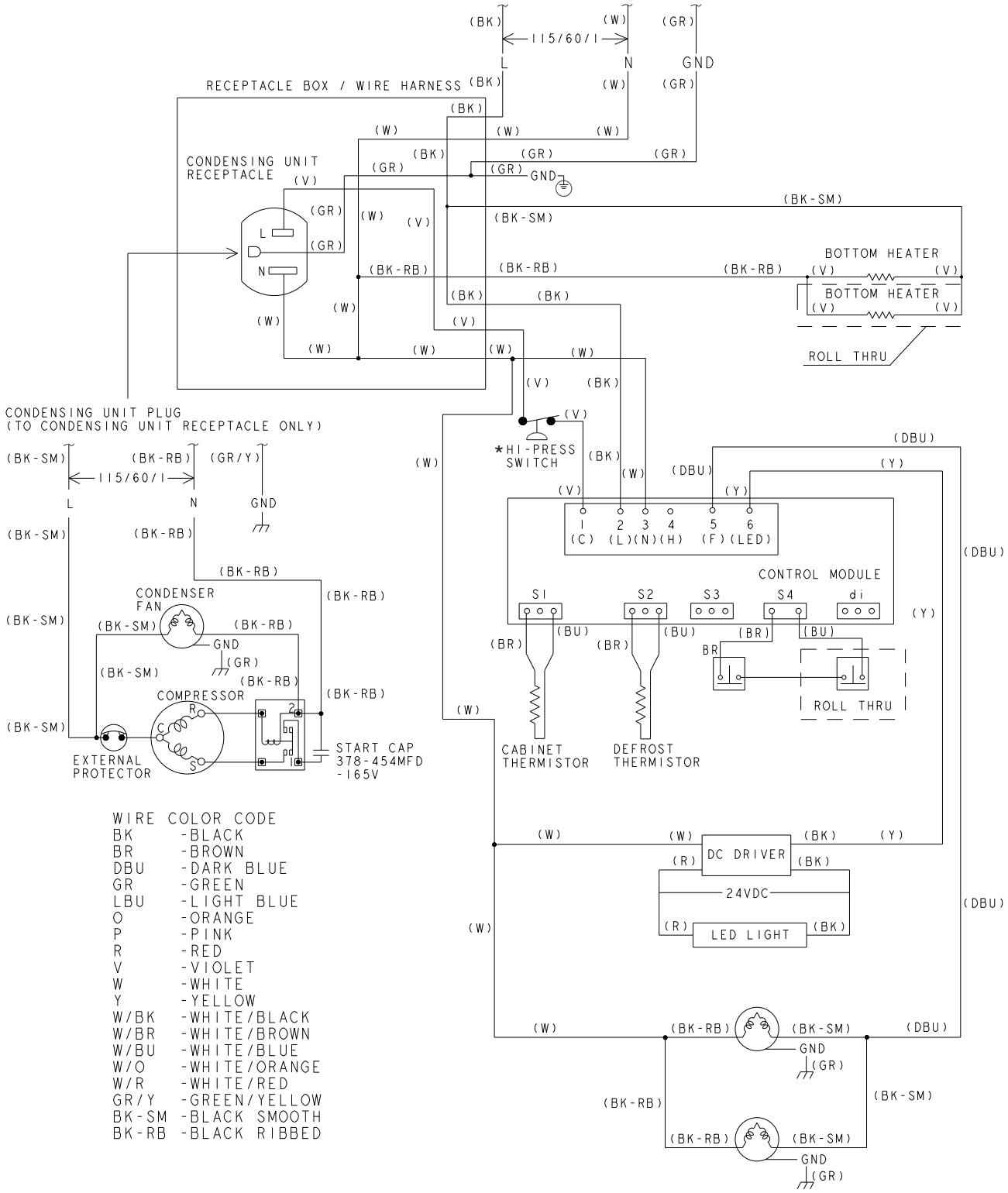

WIRE COLOR CODE

BK	-BLACK
BR	-BROWN
DBU	-DARK BLUE
GR	-GREEN
LBU	-LIGHT BLUE
O	-ORANGE
P	-PINK
R	-RED
V	-VIOLET
W	-WHITE
Y	-YELLOW
W/BK	-WHITE/BLACK
W/BR	-WHITE/BROWN
W/BU	-WHITE/BLUE
W/O	-WHITE/ORANGE
W/R	-WHITE/RED
GR/Y	-GREEN/YELLOW
BK-SM	-BLACK SMOOTH
BK-RB	-BLACK RIBBED

* High-Pressure Switch	
Cut-out	$360\pm^{30}_{0}$PSIG
Cut-in	249±10 PSIG

4. RN2A-FS, RT2A-FS-FS

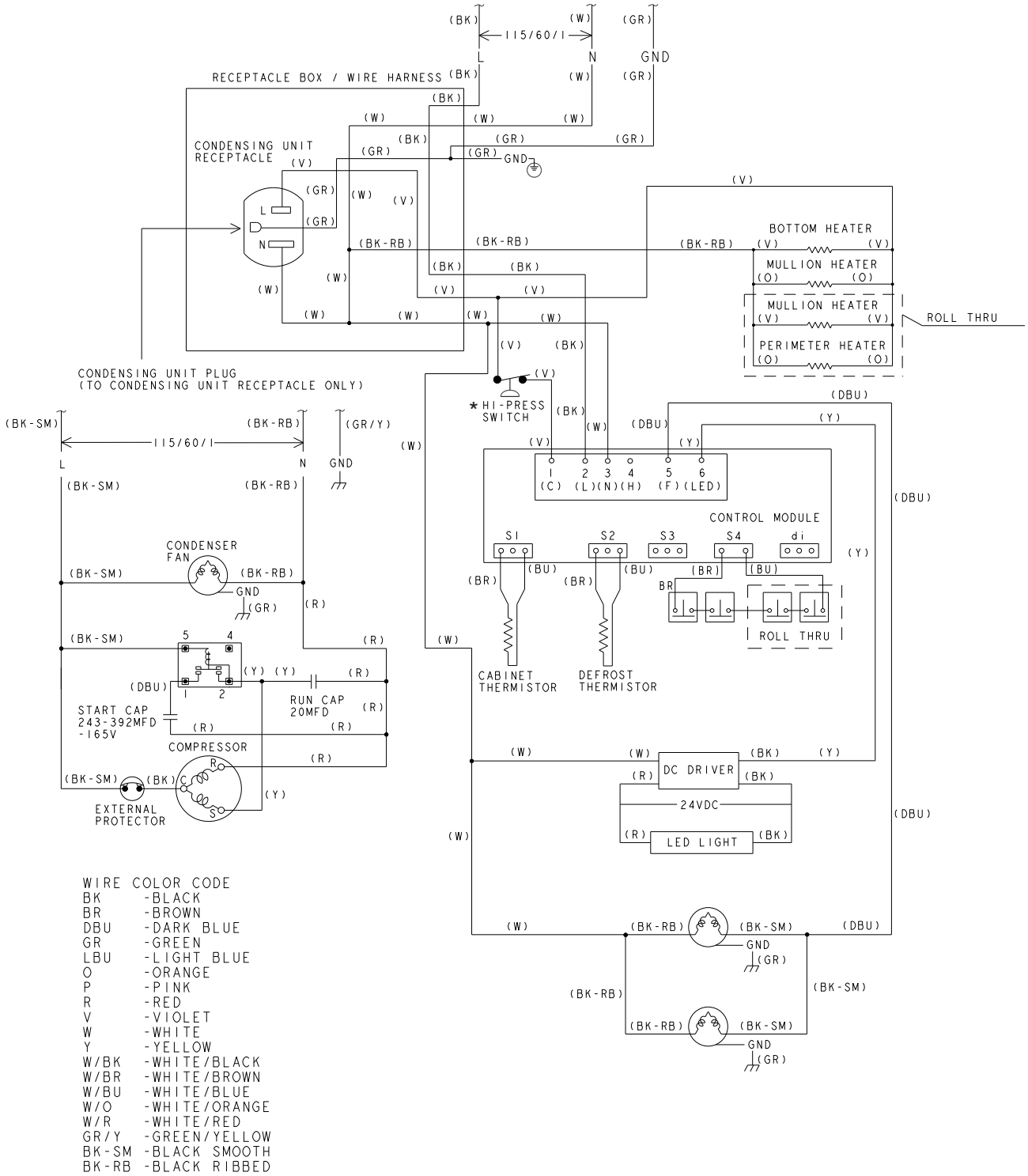

* High-Pressure Switch	
Cut-out	$360\pm^{30}_{0}$PSIG
Cut-in	249±10 PSIG

5. PT2A-FG-FG/FGE-FGE/FS-FS/HS-HS

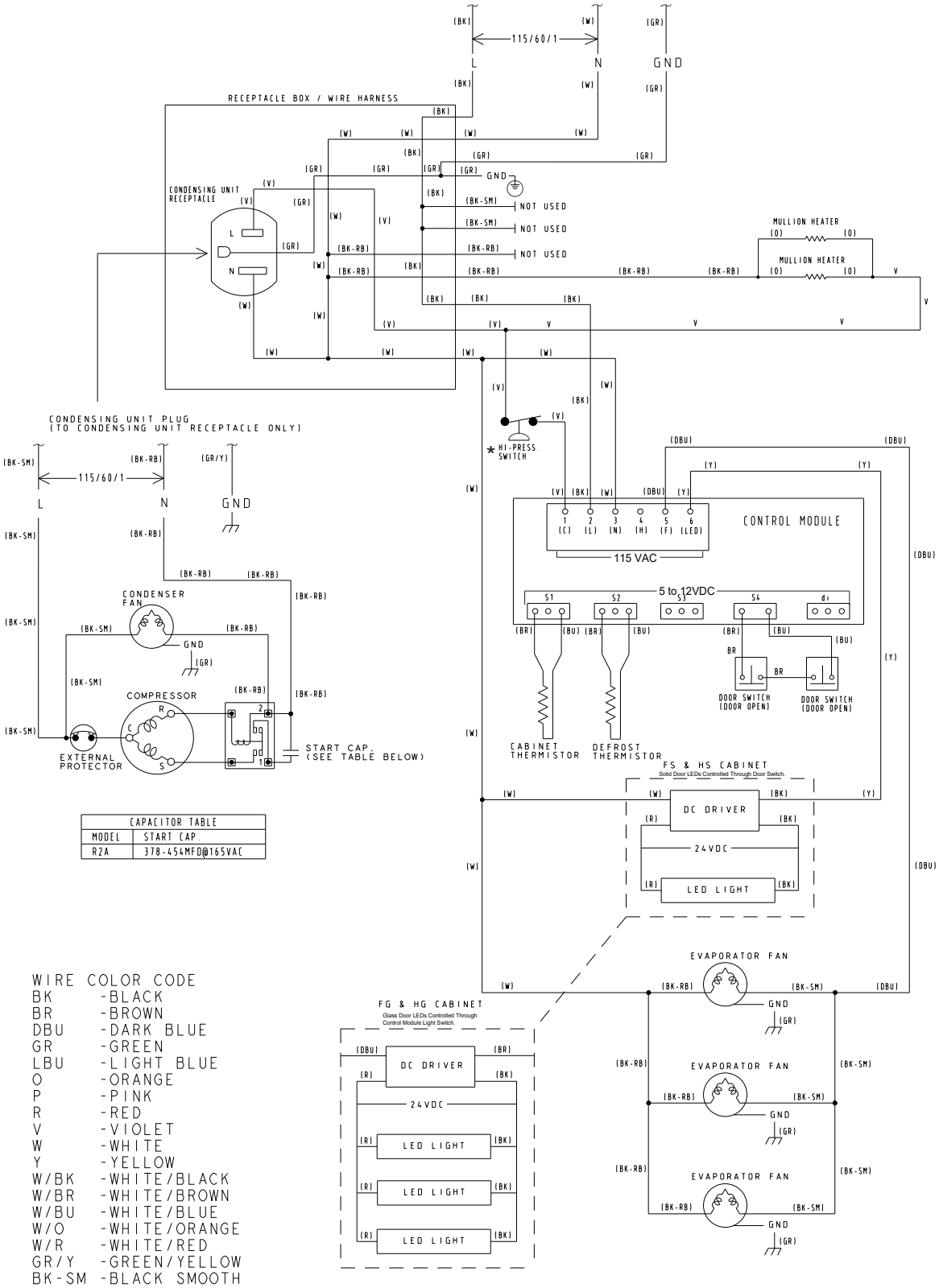

CAPACITOR TABLE	
MODEL	START CAP.
R2A	378-454MFD@165VAC

WIRE COLOR CODE

BK	-BLACK
BR	-BROWN
DBU	-DARK BLUE
GR	-GREEN
LBU	-LIGHT BLUE
O	-ORANGE
P	-PINK
R	-RED
V	-VIOLET
W	-WHITE
Y	-YELLOW
W/BK	-WHITE/BLACK
W/BR	-WHITE/BROWN
W/BU	-WHITE/BLUE
W/O	-WHITE/ORANGE
W/R	-WHITE/RED
GR/Y	-GREEN/YELLOW
BK-SM	-BLACK SMOOTH
BK-RB	-BLACK RIBBED

* High-Pressure Switch	
Cut-out	$360\pm^{30}_{0}$PSIG
Cut-in	249±10 PSIG

6. R3A-FG/FGE/FGCL/FGCR/FS/FSCL/FSCR/HS/HG/HGE

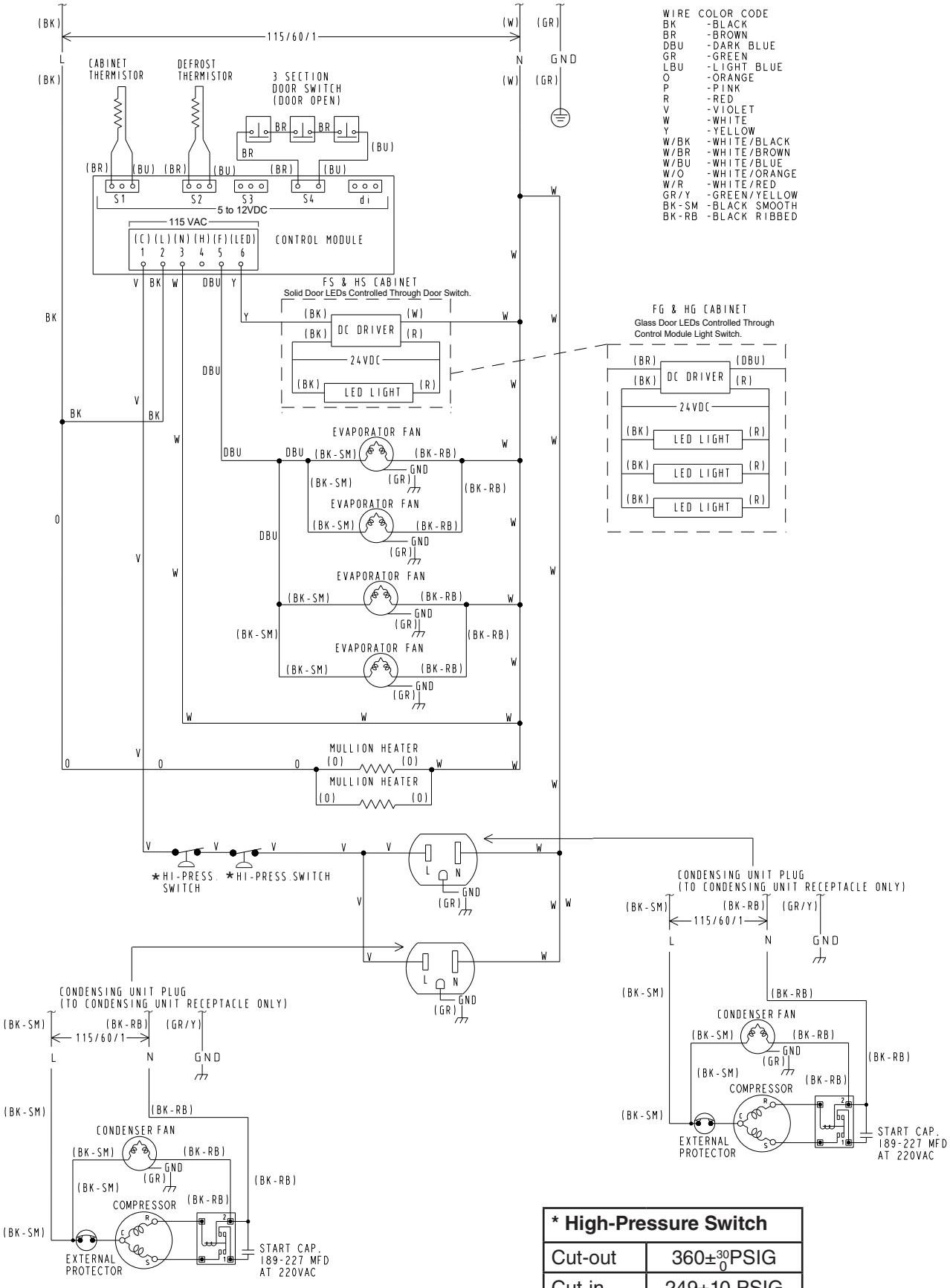

* High-Pressure Switch	
Cut-out	$360\pm^{30}_{0}$PSIG
Cut-in	249±10 PSIG

7. F2A-FG/FGE/FS/HG/HGE/HS

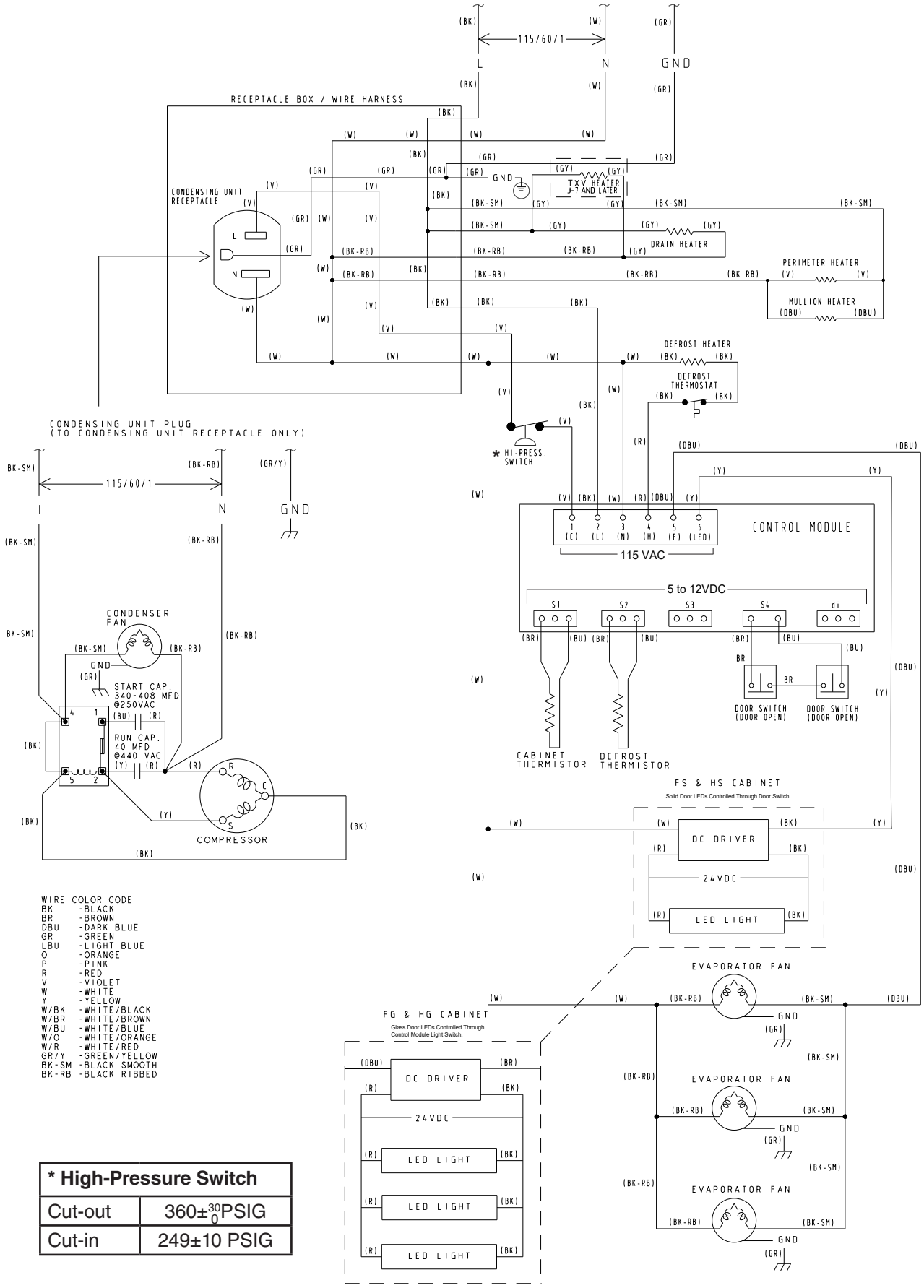

WIRE COLOR CODE

BK	-BLACK
BR	-BROWN
DBU	-DARK BLUE
GR	-GREEN
LBU	-LIGHT BLUE
O	-ORANGE
P	-PINK
R	-RED
V	-VIOLET
W	-WHITE
Y	-YELLOW
W/BK	-WHITE/BLACK
W/BR	-WHITE/BROWN
W/BU	-WHITE/BLUE
W/O	-WHITE/ORANGE
W/R	-WHITE/RED
GR/Y	-GREEN/YELLOW
BK-SM	-BLACK SMOOTH
BK-RB	-BLACK RIBBED

* High-Pressure Switch	
Cut-out	$360\pm^{30}_{0}$PSIG
Cut-in	249±10 PSIG

8. F3A-FS/HS

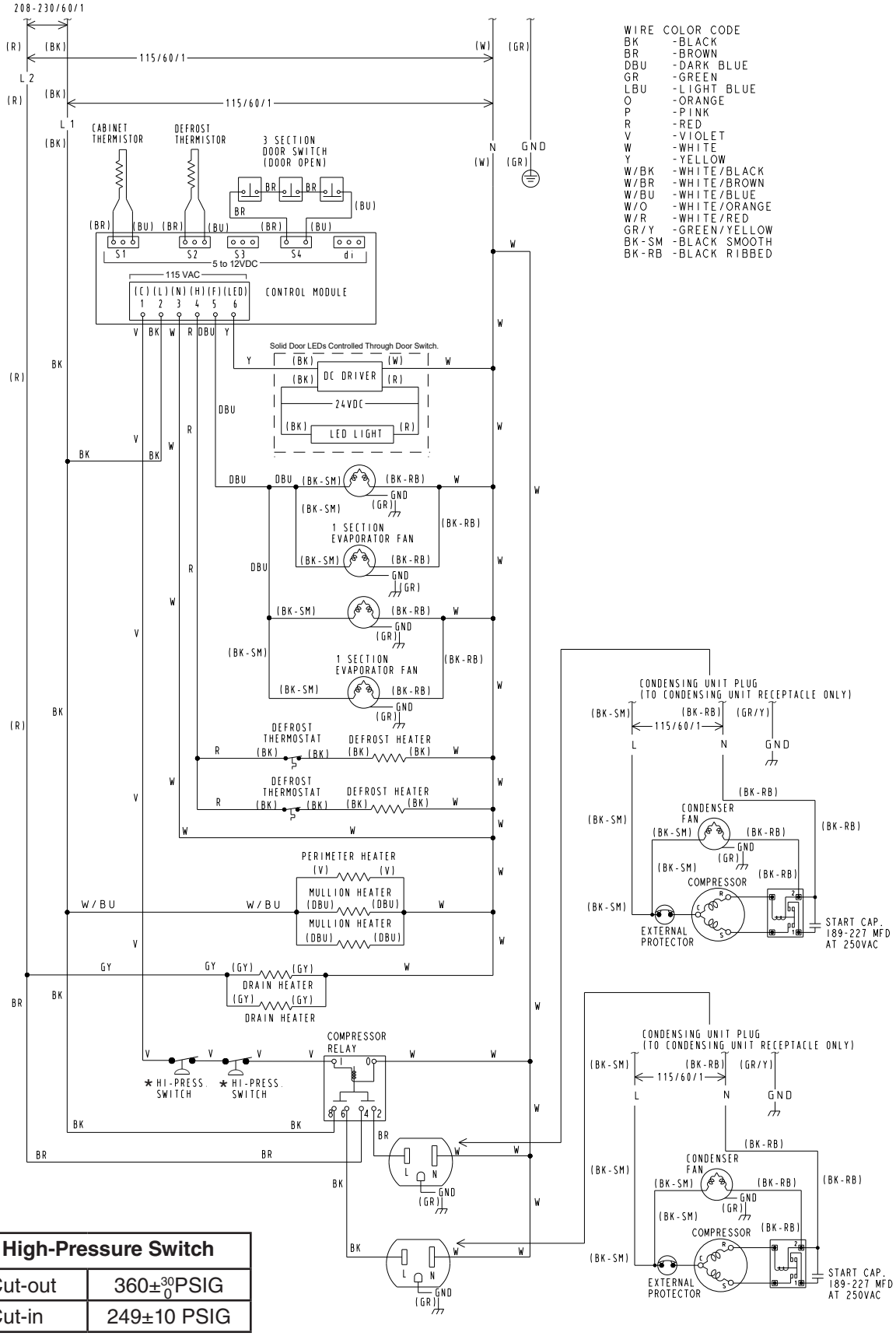

* High-Pressure Switch	
Cut-out	$360\pm^{30}_{0}$PSIG
Cut-in	249±10 PSIG

9. DT1A-HS

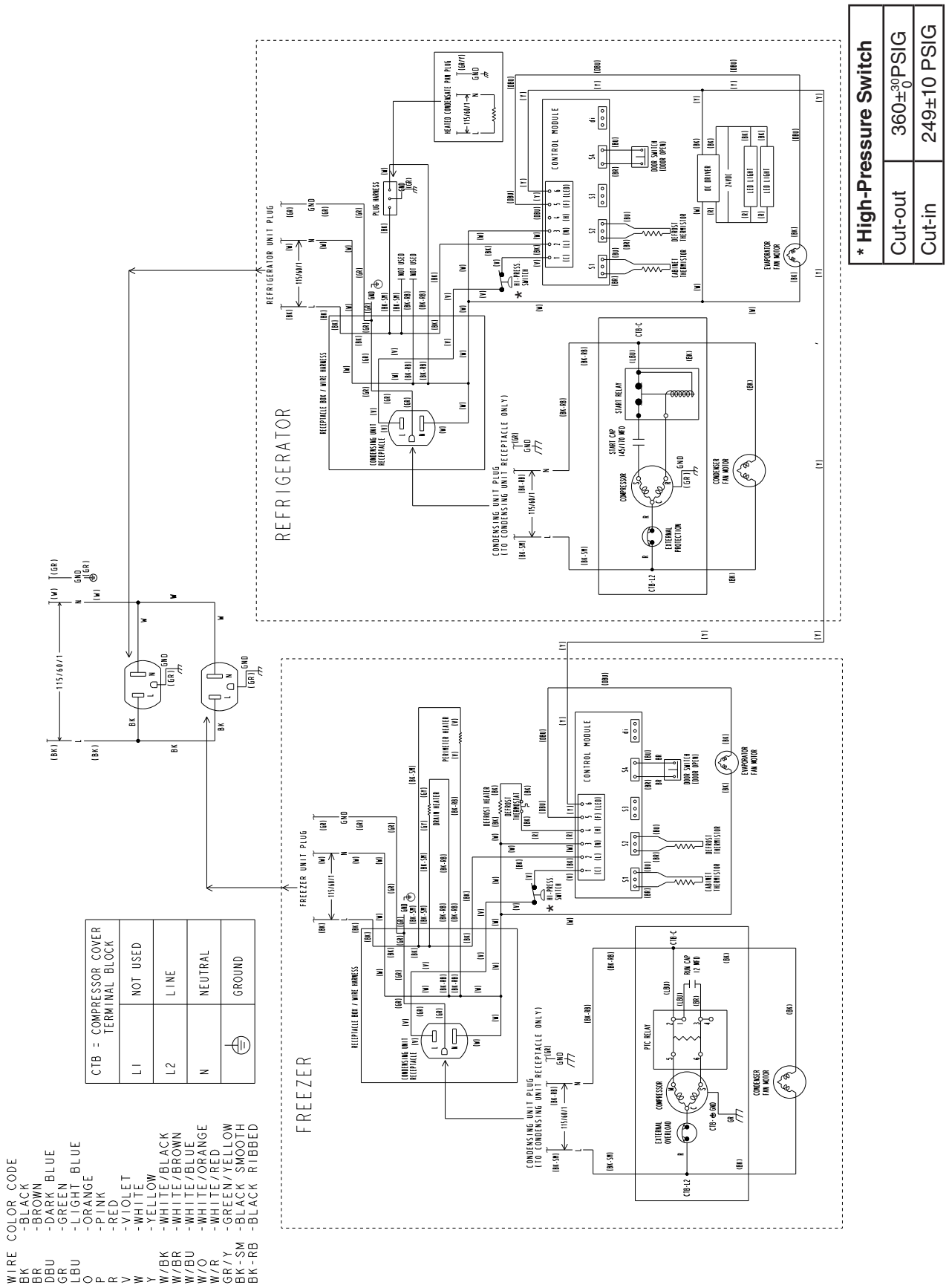

* High-Pressure Switch	
Cut-out	$360\pm^{30}_{0}$PSIG
Cut-in	249±10 PSIG

10. DT2A-FS/HS

WIRE COLOR CODE	
BK	BLACK
GR	GREEN
W	WHITE

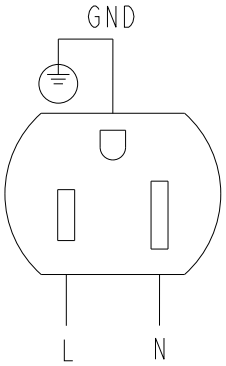

Main Connection

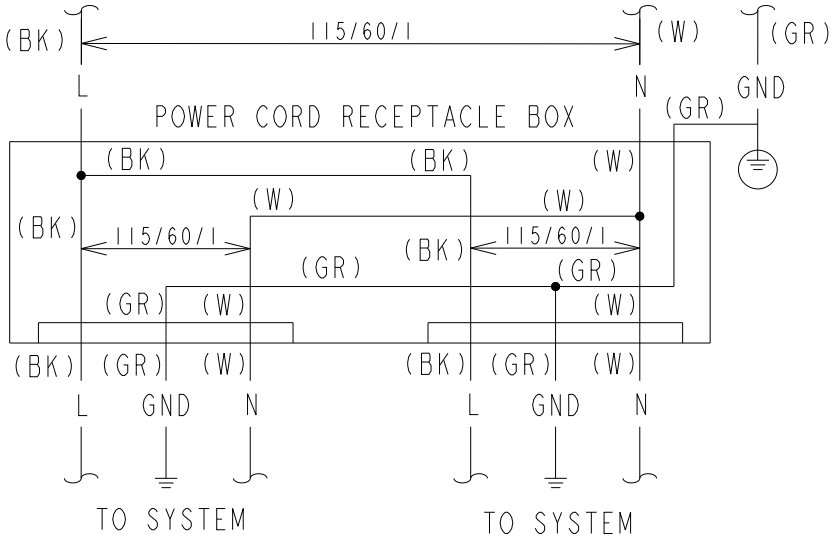

System Connection

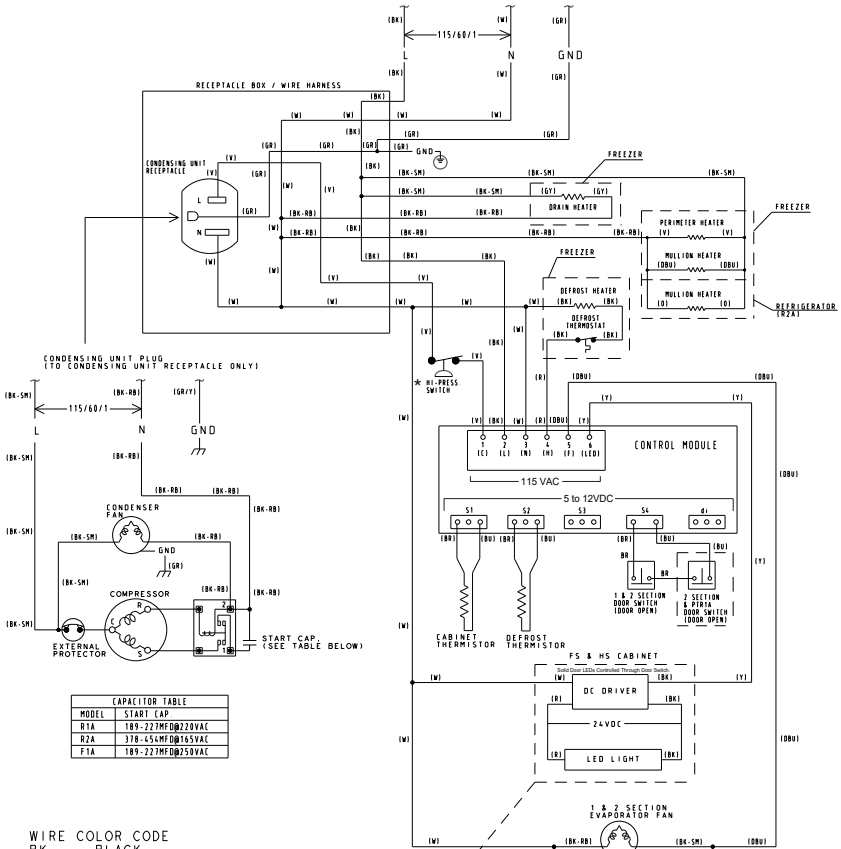

CAPACITOR TABLE	
MODEL	START CAP
R1A	189-227MFD@220VAC
R2A	378-454MFD@165VAC
F1A	189-227MFD@250VAC

WIRE COLOR CODE
BK -BLACK
BR -BROWN
DBU -DARK BLUE
GR -GREEN
LBU -LIGHT BLUE
O -ORANGE
P -PINK
R -RED
V -VIOLET
W -WHITE
Y -YELLOW
W/BK -WHITE/BLACK
W/BR -WHITE/BROWN
W/BU -WHITE/BLUE
W/O -WHITE/ORANGE
W/R -WHITE/RED
GR/Y -GREEN/YELLOW
BK-SM -BLACK SMOOTH
BK-RB -BLACK RIBBED

* High-Pressure Switch	
Cut-out	$360\pm^{30}_{0}$PSIG
Cut-in	249±10 PSIG