HOSHIZAKI

Parts List

Modular Crescent Cuber

Models
KM-1601MRJ(Z)/3

hoshizakiamerica.com

Number: 71394
Issued: 11-1-2017
Revised: 8-3-2026

CONTENTS

Auxiliary Codes 3
Note About Ordering Parts 3
A. Main Assembly & Refrigeration Circuit 4
B. Water Circuit 7
C. Control Box Assembly 11
D. Accessories and Labels 14

Auxiliary Codes

KM-1601MRJ

F-0	December 2016
H-0	February 2018
J-0	January 2019
K-0	January 2020
L-0	February 2021
L-1	August 2021
L-2	September 2021

KM-1601MRJ3

F-0	December 2016
H-0	February 2018
J-0	January 2019
J-1	April 2019
J-0	May 2019
K-0	January 2020
L-0	April 2021
L-1	July 2021
L-2	September 2021

KM-1601MRJZ

M-0	January 2022
N-0	January 2023
N-3	September 2023
P-0	January 2024
P-1	March 2024
P-2	April 2024
P-4	November 2024
Q-0	January 2025
Q-1	February 2025
Q-2	September 2025
R-0	January 2026
R-1	April 2026

KM-1601MRJZ3

M-0	January 2022
N-0	January 2023
N-3	September 2023
P-0	January 2024
P-1	March 2024
P-2	April 2024
Q-0	January 2025
Q-1	February 2025
Q-2	October 2025
R-0	January 2026
R-1	June 2026

Auxiliary Code Breakdown

The auxiliary code is the first two characters in the serial number. The first character indicates the year. Years progress or regress in alphabetical order. The series runs from "A" through "V" and the letters "I" and "O" are skipped. The second character indicates significant part changes within a year. Base is "0" and this number advances for each change. In cases where there is a letter in parentheses, this designates the month. This is the last character in the serial number. The series runs from "(A)" through "(M)" and the letter "(I)" is skipped. This designation is only included when identifying a parts change within an auxiliary code.

Note About Ordering Parts

Most assemblies cannot be ordered as complete units; parts in the assemblies generally must be ordered separately.

A. Main Assembly & Refrigeration Circuit
KM-1601MRJ(Z)/3
F-0 to R-1

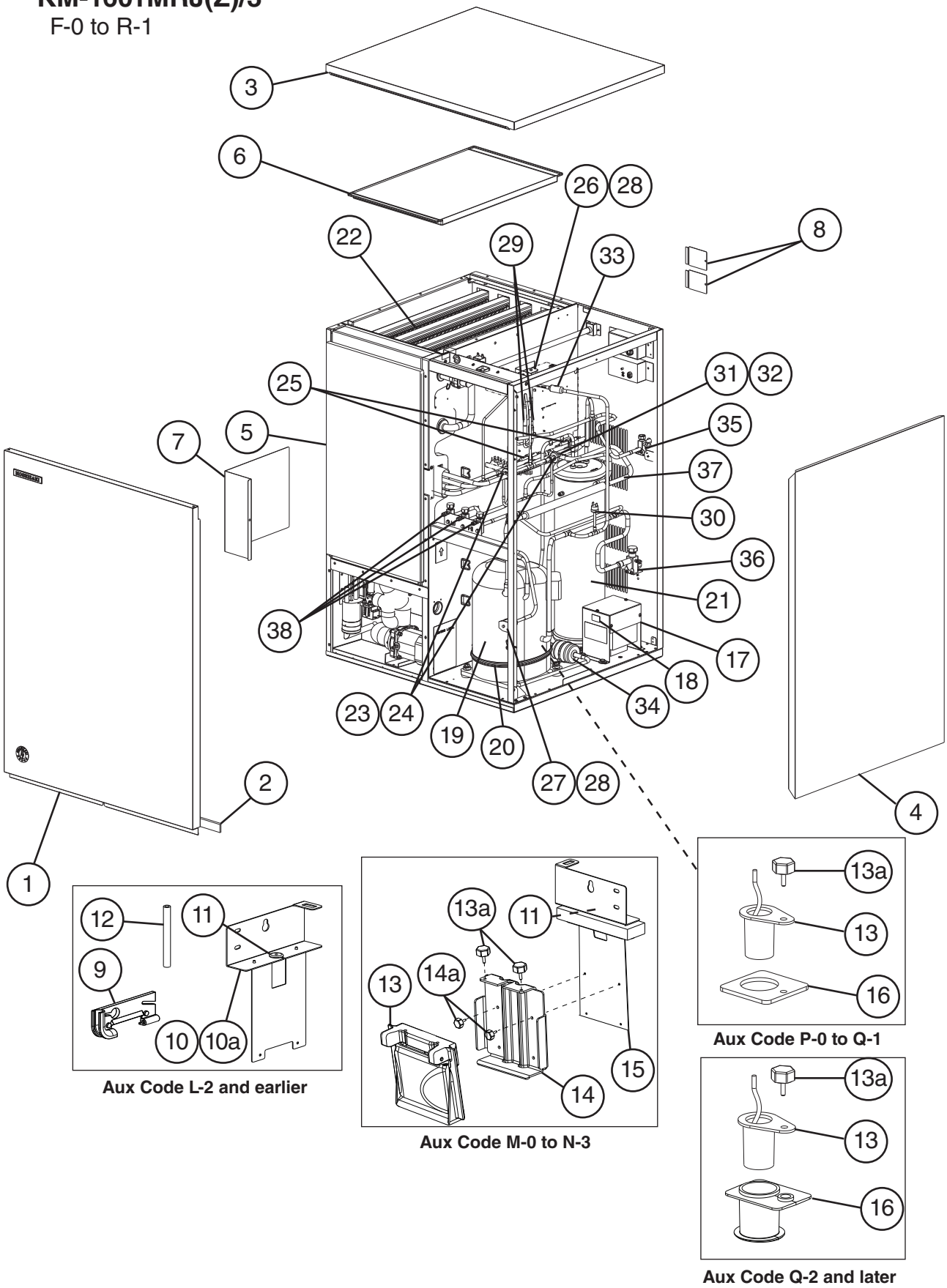

Title: A. Main Assembly & Refrigeration Circuit Model: KM-1601MRJ(Z)/3												
				Required Number								
Index No.	Description	Material or Model Number	Part Number	F-0 to L-2	M-0 to N-3	P-0 to Q-1	Q-2	R-0 R-1				
Ice Cuber Assembly												
1	Front Panel		2B0020A04	1	1	-						
			2B0020A02			1	1	1				
2	Gasket		4A0808L02	1	1	1	1	1				
3	Top Panel		2A8088-01	1	1	1	1	1				
4	Right Side Panel		2A2165G01	1	1	1	1	1				
5	Front Insulation		322711G01	1	1	1	1	1				
6	Top Insulation		322714G01	1	1	1	1	1				
7	Control Box Cover		3A2386-01	1	-							
			3B1114-01		1	-						
			3B1525-01			1	1	1				
8	Junction Box Cover		433410-01	2	2	2	2	2				
9	Thermostatic Bulb Holder	**SP-5677**	3A3903-01	1	-							
10	Thermostatic Bulb Holder Bracket		322815G02	1	-							
10a	Thumbscrew		415949G10	2	-							
11	Capillary Ring		425307-02	1	1	-						
12	Silicone Hose	L=285 mm	7730I3812	1	1	-						
13	Mechanical Bin Control		2A8598G01		1	-						
	Ultrasonic Bin Control		4A6148G01			1	1	1				
13a	Thumbscrew		415949G10		2	-						
						1	1	1				
14	Mechanical Bin Control Bracket		3A6040-01		1	-						
14a	Thumbscrews		415949G10		2	-						
15	Mechanical Bin Control Extension Bracket		4A7068G01		1	-						
16	Ultrasonic Bin Control Housing		4A7285-01			1	-					
			4A7597-01				1	-				
			4A7597-02					1				
17	Main Transformer	**KM-1601MRJ(Z)3**	4A5695-01	1	1	1	1	1				
18	Voltage Tap Switch	**KM-1601MRJ(Z)3**	4A1477-01	1	1	1	1	1				

Title: A. Main Assembly & Refrigeration Circuit Model: KM-1601MRJ(Z)/3												
				Required Number								
Index No.	Description	Material or Model Number	Part Number	F-0 to L-2	M-0 to N-3	P-0 to Q-1	Q-2	R-0 R-1				
Refrigeration Circuit												
19	Compressor	**KM-1601MRJ(Z)**	4A2334-01	1	1	1	1	1				
		KM-1601MRJ(Z)3	4A2330-01	1	1	1	1	1				
20	Crankcase Heater		4A5397-02	1	1	1	1	1				
21	Receiver		4A6215-01	1	1	1	1	1				
22	Evaporator	**SP-5361**	1A4309G01	1	1	1	1	1				
23	Thermostatic Expansion Valve		4A1482-01	2	2	2	2	2				
24	Thermostatic Expansion Valve Cover		3A0944-01	2	2	-						
			4A6853-01			2	2	2				
25	Thermostatic Expansion Valve Bulb Holder		3A0107-01	2	2	2	2	2				
26	Hot Gas Valve Body		4A3978-01	1	1	1	1	1				
27	Liquid Line Valve Body		4A3276-01	1	1	1	1	1				
28	Valve Coil		4A3277-01	2	2	2	2	2				
29	Check Valve		4A1373-01	2	2	2	2	2				
30	High-Pressure Switch		463180-04	1	1	1	1	1				
31	Thermistor	**SP-5672**	429006-03	1	1	1	1	1				
32	Thermistor Holder		427430-01	1	1	1	1	1				
33	Strainer		441569-04	1	1	1	1	1				
34	Drier		4A2663-01	1	1	1	1	1				
35	Liquid Line Coupling	**KM-1601MRJ/3**	4A3887-01	1	-							
	Liquid Line Service Valve	**KM-1601MRJZ/3**	4A3491-01		1	1	1	1				
36	Discharge Line Coupling	**KM-1601MRJ/3**	434136-01	1	-							
	Discharge Line Service Valve	**KM-1601MRJZ/3**	4A3490-01		1	1	1	1				
37	Heat Exchanger		1A4327G01	1	1	1	1	1				
38	Service Valve		4A3420-01	3	3	3	3	3				

B. Water Circuit

KM-1601MRJ(Z)/3 1/2

F-0 to N-3

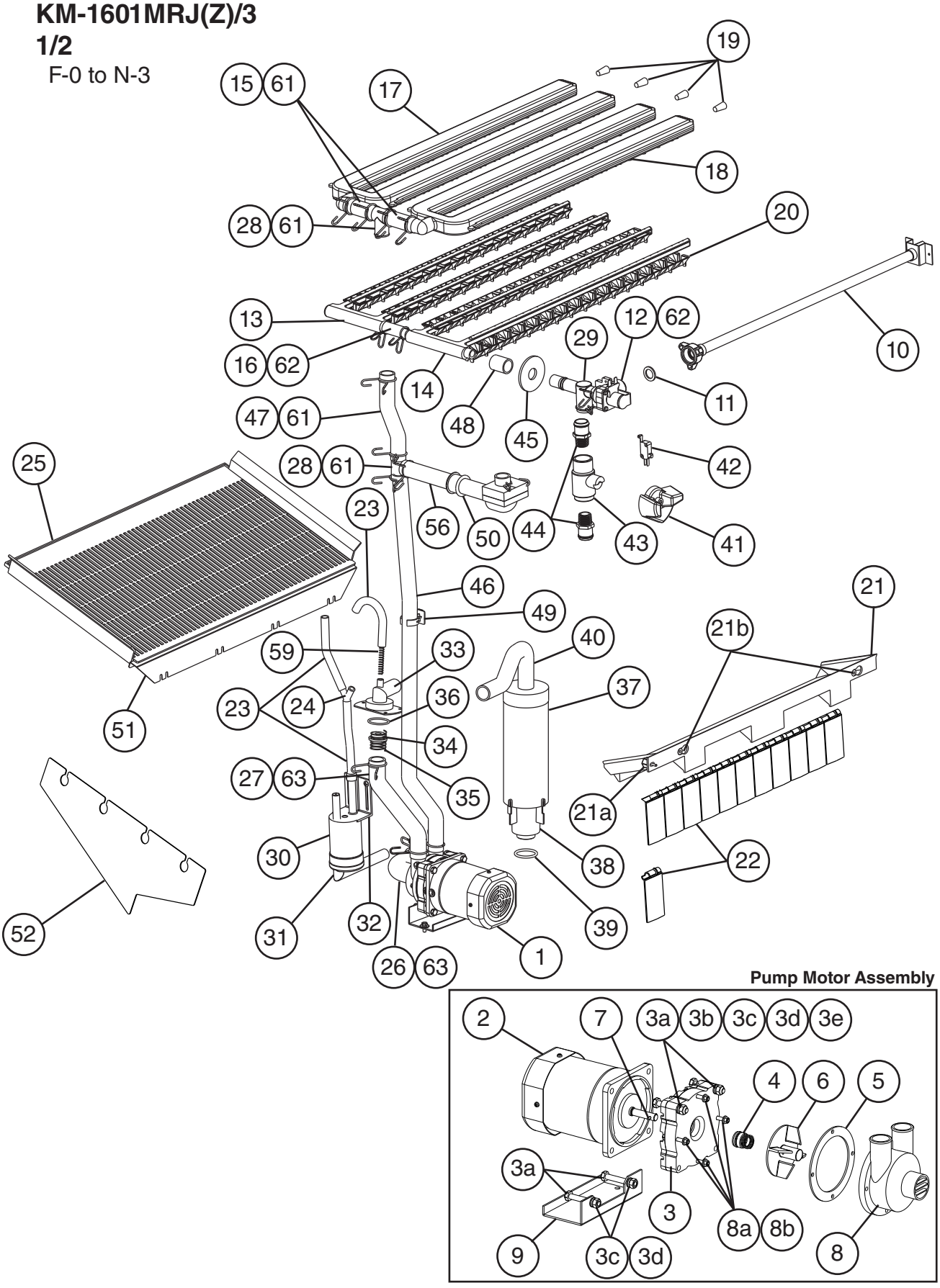

B. Water Circuit

KM-1601MRJ(Z)/3 2/2

P-0 to R-1

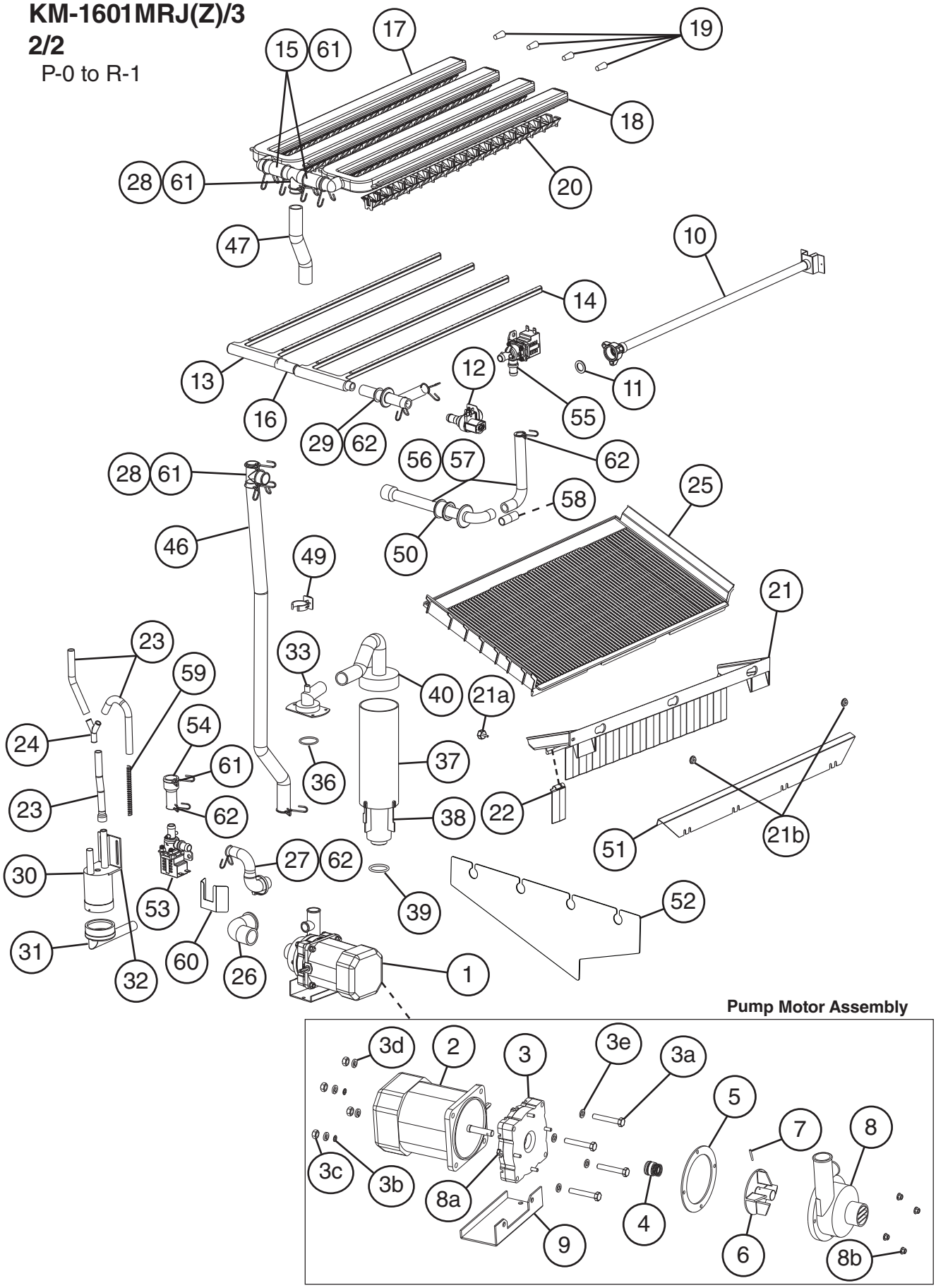

Title: B. Water Circuit Model: KM-1601MRJ(Z)/3

Index No.	Description	Material or Model Number	Part Number	Required Number								
				F-0	H-0 to L-0	L-1	L-2 to N-3	P-0 to P-4	Q-0	Q-1 to R-0	R-1	
1	Pump Motor Assembly (includes items 2 through 8b)	**SP-0731**	215693A01	1	1	1	1	-				
			2B0399A01					1	1	1	1	
2	Pump Motor		3A7682-01	1	1	-						
			2U0106-01			1	1	1	-			
			4A7462-01						1	1	1	
3	Pump Flange		215662-01	1	1	1	1	1	1	1	1	
3a	Hex Head Bolt	6×40, SS	7B02-0640	4	4	4	4	4	4	4	4	
3b	Tooth Washer	M6, SS	7R22-0600	1	1	1	1	1	1	1	1	
3c	Hex Nut	M6, SS	7N12-0600	4	4	4	4	4	4	4	4	
3d	Split Lock Washer	M6, SS	7L22-0600	4	4	4	4	4	4	4	4	
3e	Flat Washer	M6, SS	7W22-0600	4	4	4	4	4	4	4	4	
4	Mechanical Seal		4A3820-03	1	1	1	1	1	1	1	1	
5	Packing		428547-01	1	1	1	1	1	1	1	1	
6	Impeller		428548-01	1	1	1	1	1	1	1	1	
7	Pin		4A0648-01	1	1	1	1	1	1	1	1	
8	Pump Housing		212636-01	1	1	1	1	-				
			2A2762-01					1	1	1	1	
8a	Bolt		7B02-0430	4	4	4	4	4	4	4	4	
8b	Nut		7J02-0400	4	4	4	4	4	4	4	4	
9	Pump Motor Bracket		435057-01	1	1	1	1	1	1	1	1	
10	Water Supply Pipe	**HS-0242**	4A5216G04	1	1	1	1	1	1	1	1	
11	Rubber Gasket		413854-03	1	1	1	1	1	1	1	1	
12	Inlet Water Valve		3B1433-01	1	1	1	1	1	1	-		
			3U0111-01							1	1	
13	Left Water Supply Tube		2A0079-01	1	1	1	1	1	1	1	1	
14	Right Water Supply Tube		2A0079-02	1	1	1	1	1	1	1	1	
15	Vinyl Hose	L=60 mm	7716-2025	2	2	2	2					
			7716B2025					2	2	2	2	
16	Vinyl Hose	L=50 mm	7716-1519	1	1	1	1					
			7716B1519					1	1	1	1	
17	Left Spray Tube		1A0260-02	1	1	1	1	1	1	1	1	
18	Right Spray Tube		1A0260-01	1	1	1	1	1	1	1	1	
19	Plug		4A0176-01	4	4	4	4	4	4	4	4	
20	Spray Guide		2A4282-02	4	4	4	4	4	4	4	4	
21	Cube Guide B		322644-02	1	-							
			3A9745-01		1	1	1	1	1	1	1	
21a	Thumbscrew		415949G12	1	1	1	1	1	1	1	1	
21b	Collar		435269-01	2	2	2	2	2	2	2	2	
22	Separator		3A9811-01		13	13	13	13	13	13	13	
23	Silicone Hose	L=130 mm	7730I3812	3	3	3	3	3	3	3	3	
24	Connector Tee		432763-01	1	1	1	1	1	1	1	1	
25	Cube Guide A	**SP-5570**	214905-01	1	1	1	1	1	1	1	1	
26	Hose A (inlet)		435091-01	1	1	1	1	1	1	1	1	
27	Drain Hose		435092-01	1	1	1	1	-				
	Drain Hose A		3B1457-01					1	1	1	1	
28	Distributor Tee		432426-01	2	2	2	2	2	2	2	2	

Title: B. Water Circuit Model: KM-1601MRJ(Z)/3												
				Required Number								
Index No.	Description	Material or Model Number	Part Number	F-0	H-0 to L-0	L-1	L-2 to N-3	P-0 to P-4	Q-0	Q-1 to R-0	R-1	
29	Distributor A (Tee)		4A0177-01	1	1	1	1	-				
			3A9429-01					1	1	1	1	
30	Float Switch		4A7077G02	1	1	1	1	1	1	1	1	
31	Float Switch Connector		426799-01	1	1	1	1	1	1	1	1	
32	Float Switch Stop		3A9640-01		1	1	1	1	1	1	1	
33	Drain Valve Housing		3A1170-01	1	1	1	1	1	1	1	1	
34	Drain Valve Seat		433705-01	1	1	1	1					
35	Drain Valve Spring		322685-01	1	1	1	1					
36	Drain Valve O-Ring		7611-G035	1	1	1	1	1	1	1	1	
37	Overflow Cap		322816-01	1	1	1	1	1	1	1	1	
38	Overflow Pipe		322691-01	1	1	1	1	1	1	1	1	
39	O-Ring		4A1234-01	1	1	1	1	1	1	1	1	
40	Hose C		326655-01	1	1	1	1	1	1	1	1	
41	Cleaning Valve Handle		215383-01	1	1	1	1					
42	Cleaning Valve Microswitch		4A2546-01	1	1	1	1					
43	Cleaning Valve Ball Valve	**S-0761**	439293-01	1	1	1	1					
44	Cleaning Valve Male Adaptor		325826-01	2	2	2	2					
45	Flange		439267-01	1	1	1	1					
46	Vinyl Hose	L=700 mm	7716-2025	1	1	1	-					
			7716B2025				1	1	1	1	1	
47	Vinyl Hose	L=165 mm	7716-2025	1	1	1	-					
			7716B2025				1					
48	Vinyl Hose	L=30 mm	7716-2025	1	1	1	-					
			7716B2025				1					
49	Holder		322692-01	1	1	1	1	1	1	1	1	
50	Rubber Ring		439236-01	1	1	1	1	1	1	1	1	
51	Cube Guide Plate		3B0973-01	1	1	1	1	1	1	1	1	
52	Splash Guard		4A6118-02				1	1	1	1	1	
53	Drain Valve		4A5745-07				1	1	1	1	1	
54	Drain Hose B		3B1462-01				1	1	1	1	1	
55	Cleaning Valve		4A5745-06				1	1	1	1	1	
56	Bypass Hose		439265-01	1	1	1	1	-				
	3-Piece Bypass Hose Assembly (includes items 57 and 58)		3B1376G01					1	1	1	1	
57	Bypass Hose B		3B1376-02				1	1	1	1	1	
58	Joint Pipe		4A6286-01				1	1	1	1	1	
59	Spring		435825-01	1	1	1	1	1	1	1	1	
60	Drain Valve Terminal Cover		3B1856-02					1	1	1	1	
Hose Clamps												
61	Hose Clamp	25 mm	427443-03	12	12	12	12	10	10	10	10	
62	Hose Clamp	18 mm	427443-05	3	3	3	3	5	5	5	5	
63	Hose Clamp	27 mm	427443-08	2	2	2	2					

C. Control Box Assembly
KM-1601MRJ(Z)/3
1/2
F-0 to N-3

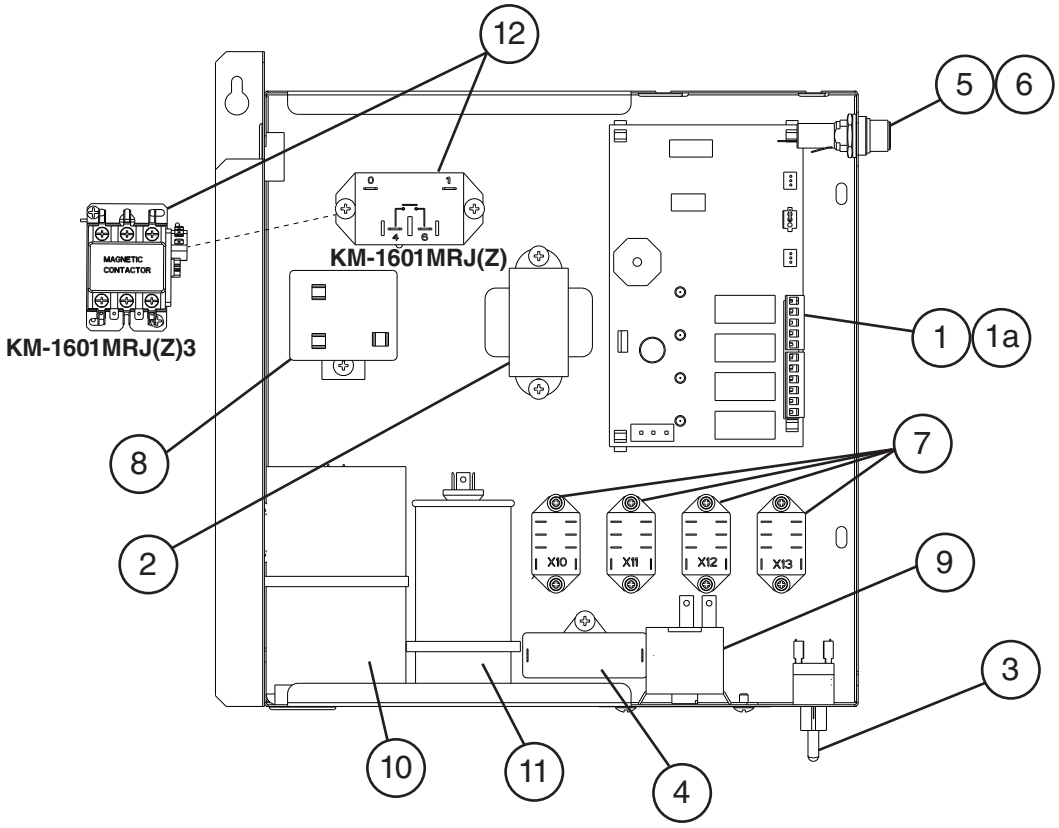

KM-1601MRJ(Z) shown

C. Control Box Assembly
KM-1601MRJ(Z)/3
2/2

P-0 to R-1

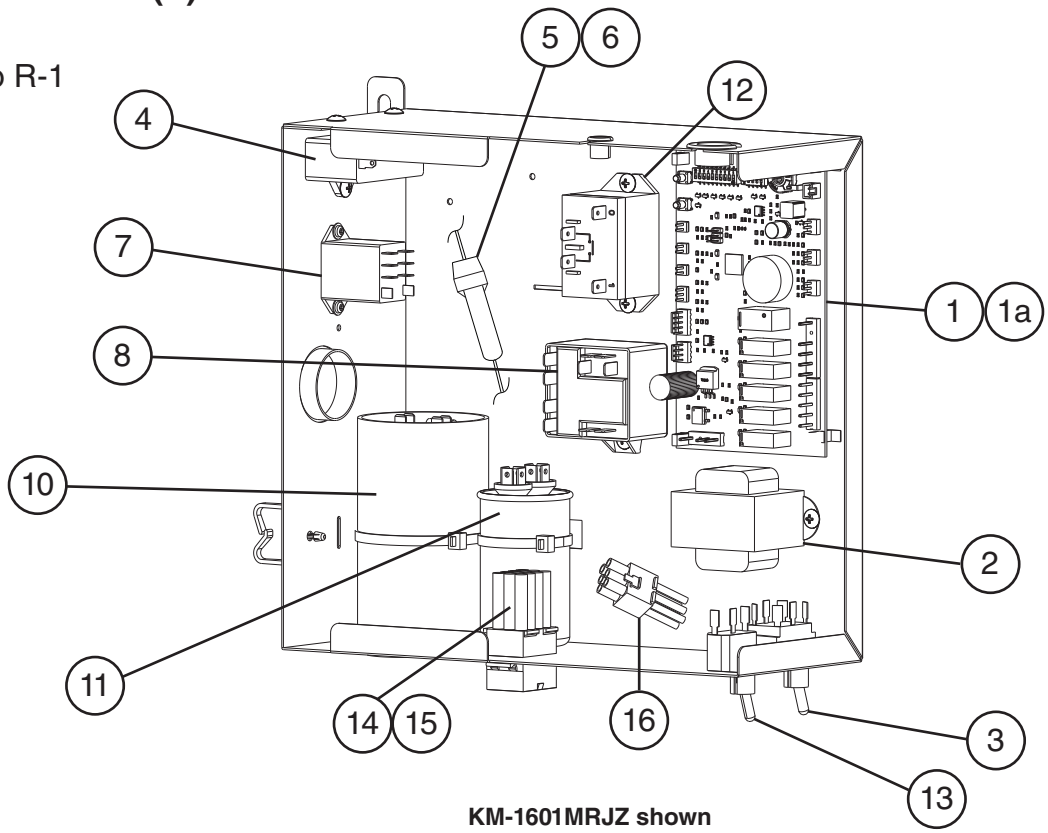

KM-1601MRJZ shown

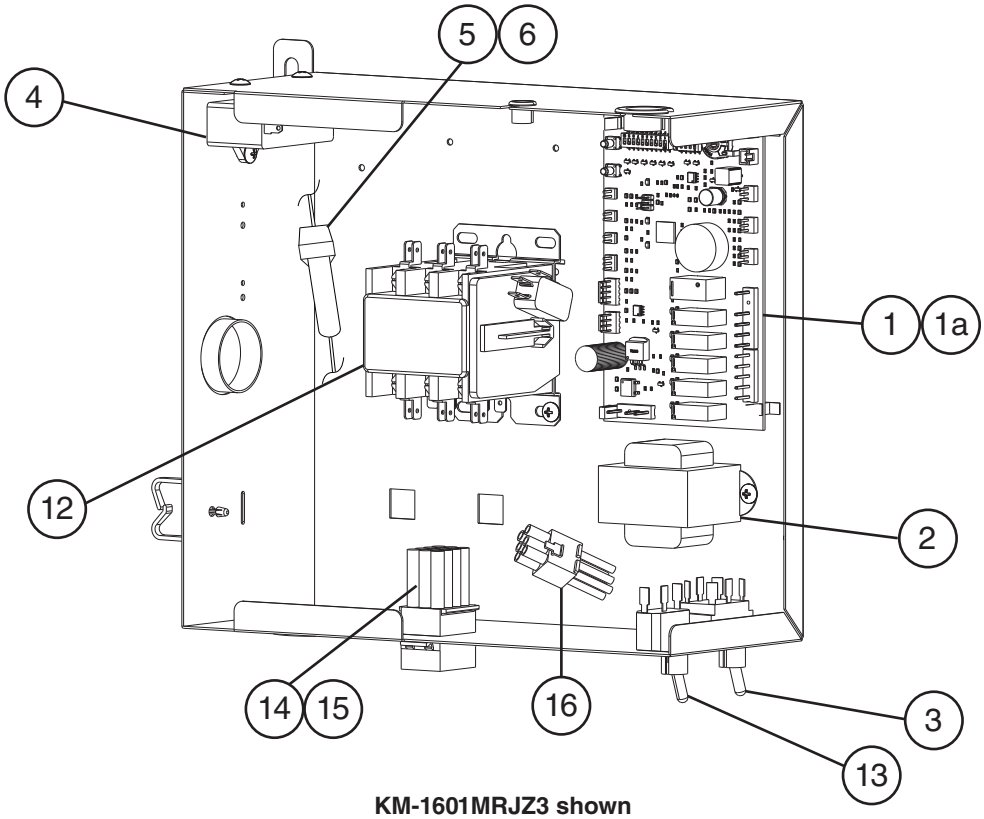

KM-1601MRJZ3 shown

Title: C. Control Box Assembly Model: KM-1601MRJ(Z)/3												
				Required Number								
Index No.	Description	Material or Model Number	Part Number	F-0 to J-0 (F)	J-0 (G) to L-2	M-0 to N-3	P-0 to P-2	P-4	Q-0 to R-1			
1	Control Board		2A7664-04	1	1	1	-					
			2A9678-01				1	-				
			2A9678-02					1	1			
1a	Control Board Support		4A0336-03	4	4	4	4	4	4			
2	Control Transformer		3A0172-01	1	1	1	1	1	1			
3	Control Switch		443119-01	1	1	1	-					
	Mode Switch		4A6232-01				1	1	1			
4	Pump Motor Capacitor	10MFD, 250VAC	443192-01	1	-	-						
			4A6435-01		1	1	1	1	-			
		15MFD, 240VAC	439705-01						1			
5	Fuse Holder		4A5443-01	1	1	1	-					
	In-Line Fuse Holder		4A6950-01				1	1	1			
6	Fuse	10A, 250VAC	4A0893-07	1	1	1	1	1	1			
7	Relay (X10 = Pump Direction X11 = X10 Control X12 = Anti-Slush Control) Relay (X13 = Crankcase Heater)	**All Models**	406132-07	4	4	4	-					
	X10 = Crankcase Heater	**KM-1601MRJZ**					1	1	1			
8	Start Relay	**KM-1601MRJ(Z)**	4A1107-09	1	1	1	1	1	1			
9	Bin Control Thermostat		4A2879-02	1	1							
10	Start Capacitor	**KM-1601MRJ(Z)** 145-174MFD, 250VAC	3A0076-01	1	1	1	1	1	1			
11	Run Capacitor	**KM-1601MRJ(Z)** 35MFD, 370VAC	3A2005-05	1	1	1	1	1	1			
12	Compressor Relay	**KM-1601MRJ(Z)**	4A3140-01	1	1	1	1	1	1			
	Magnetic Contactor	**KM-1601MRJ(Z)3**	4A0794-01	1	1	1	1	1	1			
13	Control Switch		4A0985-01				1	1	1			
14	Wire Harness A - (includes items 5 and 6)	**KM-1601MRJZ**	1A7314-01				1	1	1			
		KM-1601MRJZ3	1A7315-01				1	1	1			
15	Wire Harness B		1A7316-01				1	1	1			
16	Wire Harness C		1A5697-01				1	1	1			

D. Accessories and Labels
KM-1601MRJ(Z)/3
F-0 to R-1

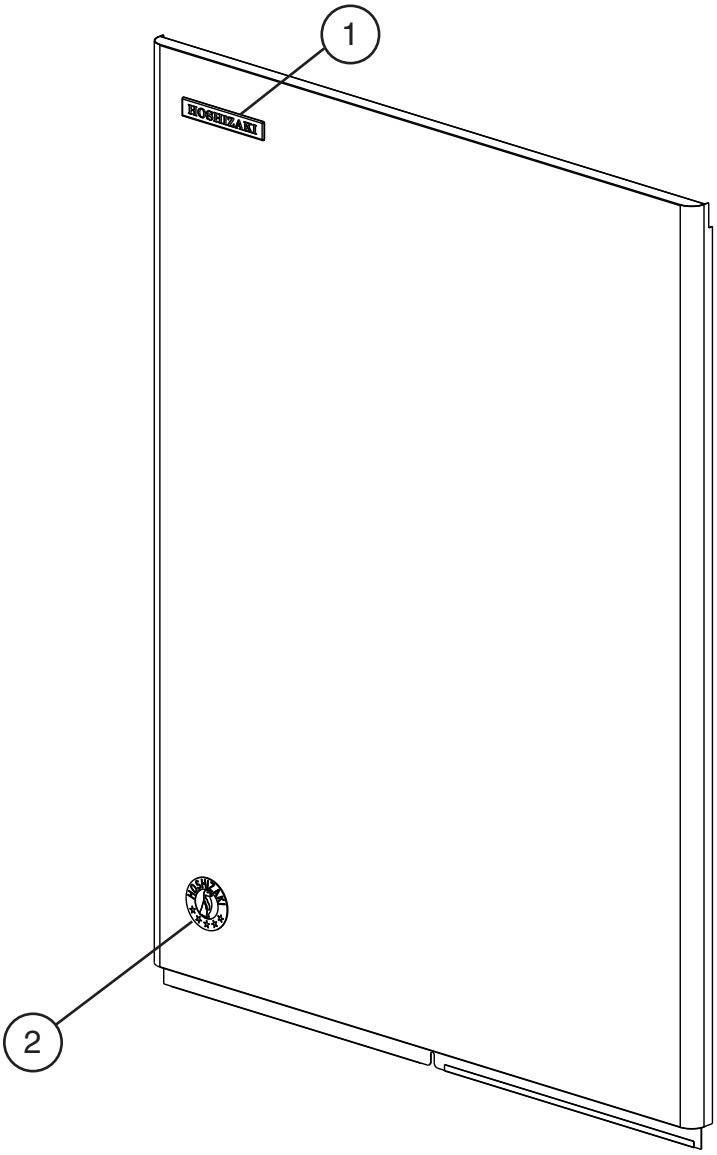

Title: D. Accessories and Labels Model: KM-1601MRJ(Z)/3												
				Required Number								
Index No.	Description	Material or Model Number	Part Number	F-0 to R-1								
1	Hoshizaki Emblem Label		4A0560-01	1								
2	Penguin Label		475552L02	1								
3	Universal Brace		4A0363-01	2								
3a	Hex Head Bolt	5×12, SS	7B02-0512	2								