HOSHIZAKI

Parts List

Stackable Crescent Cuber

Models
KM-1601SAJ/3
KM-1601SWJ/3
KM-1601SRJ(Z)/3

hoshizakiamerica.com

Number: 71375
Issued: 5-15-2017
Revised: 5-28-2026

CONTENTS

Auxiliary Codes 3
Note About Ordering Parts 4
A. Ice Cuber Assembly & Refrigeration Circuit 5
KM-1601SAJ/3 5
KM-1601SWJ/3 9
KM-1601SRJ(Z)/3 12
B. Water Circuit 16
C. Control Box Assembly 20
D. Accessories and Labels 24

Auxiliary Codes

KM-1601SAJ

F-0	October 2016
G-0	June 2017
G-1	September 2017
G-2	November 2017
H-0	January 2018
J-0	January 2019
J-1	April 2019
K-0	January 2020
L-0	January 2021
M-0	February 2022
M-1	March 2022
N-0	January 2023
N-1	May 2023
N-2	June 2023
N-3	September 2023
P-0	January 2024
P-1	March 2024
P-2	April 2024
P-3	October 2024
P-4	December 2024
Q-0	January 2025
Q-1	April 2025
Q-2	July 2025
R-0	January 2026

KM-1601SWJ

F-0	October 2016
G-0	June 2017
G-1	September 2017
H-0	January 2018
J-0	January 2019
J-1	April 2019
K-0	January 2020
L-0	January 2021
M-0	January 2022
M-1	May 2022
N-0	March 2023
N1	May 2023
N-2	August 2023
N-3	October 2023
P-0	January 2024
P-2	May 2024
Q-1	May 2025
Q-2	July 2025
R-0	January 2026

KM-1601SRJ

F-0	October 2016
G-0	June 2017
G-1	September 2017
H-0	January 2018
J-0	January 2019
J-1	April 2019
K-0	January 2020
L-0	January 2021

KM-1601SRJZ

M-0	January 2022
M-1	August 2022
N-0	January 2023
N-1	May 2023
N-2	June 2023
N-3	September 2023
P-0	February 2024
P-2	April 2024
P-4	September 2024
P-3	October 2024
P-4	December 2024
Q-0	February 2025
Q-1	April 2025
Q-2	July 2025
R-0	February 2026

KM-1601SAJ3

F-0	October 2016
G-0	June 2017
G-2	November 2017
H-0	January 2018
J-0	January 2019
J-1	April 2019
K-0	January 2020
L-0	January 2021
M-0	February 2022
M-1	May 2022
N-0	March 2023
N-1	May 2023
N-2	July 2023
N-3	October 2023
P-0	March 2024
P-3	July 2024
Q-0	January 2025
Q-1	June 2025
Q-2	July 2025
R-0	February 2026

KM-1601SWJ3

F-0	October 2016
G-0	June 2017
G-1	September 2017
H-0	January 2018
J-0	February 2019
J-1	April 2019
K-0	February 2020
L-0	February 2021
M-0	January 2022
M-1	May 2022
N-0	March 2023
N-1	May 2023
N-3	October 2023
P-0	January 2024
P-1	June 2024
Q-2	August 2025
R-0	February 2026

Auxiliary Codes Continued

KM-1601SRJ3

F-0	October 2016
G-0	June 2017
G-1	December 2017
H-0	January 2018
J-0	January 2019
J-1	April 2019
L-0	January 2021

KM-1601SRJZ3

M-0	January 2022
M-1	September 2022
N-0	March 2023
N-1	May 2023
N-2	June 2023
N-3	September
P-0	January 2024
P-3	October 2024
Q-0	January 2025
Q-1	April 2025
Q-2	July 2025
R-0	January 2026

Auxiliary Code Breakdown

The auxiliary code is the first two characters in the serial number. The first character indicates the year. Years progress or regress in alphabetical order. The series runs from "A" through "V" and the letters "I" and "O" are skipped. The second character indicates significant part changes within a year. Base is "0" and this number advances for each change. In cases where there is a letter in parentheses, this designates the month. This is the last character in the serial number. The series runs from "(A)" through "(M)" and the letter "(I)" is skipped. This designation is only included when identifying a parts change within an auxiliary code.

Note About Ordering Parts

Most assemblies cannot be ordered as complete units; parts in the assemblies generally must be ordered separately.

A. Ice Cuber Assembly & Refrigeration Circuit
KM-1601SAJ/3
1/2

N-3(J) and Earlier

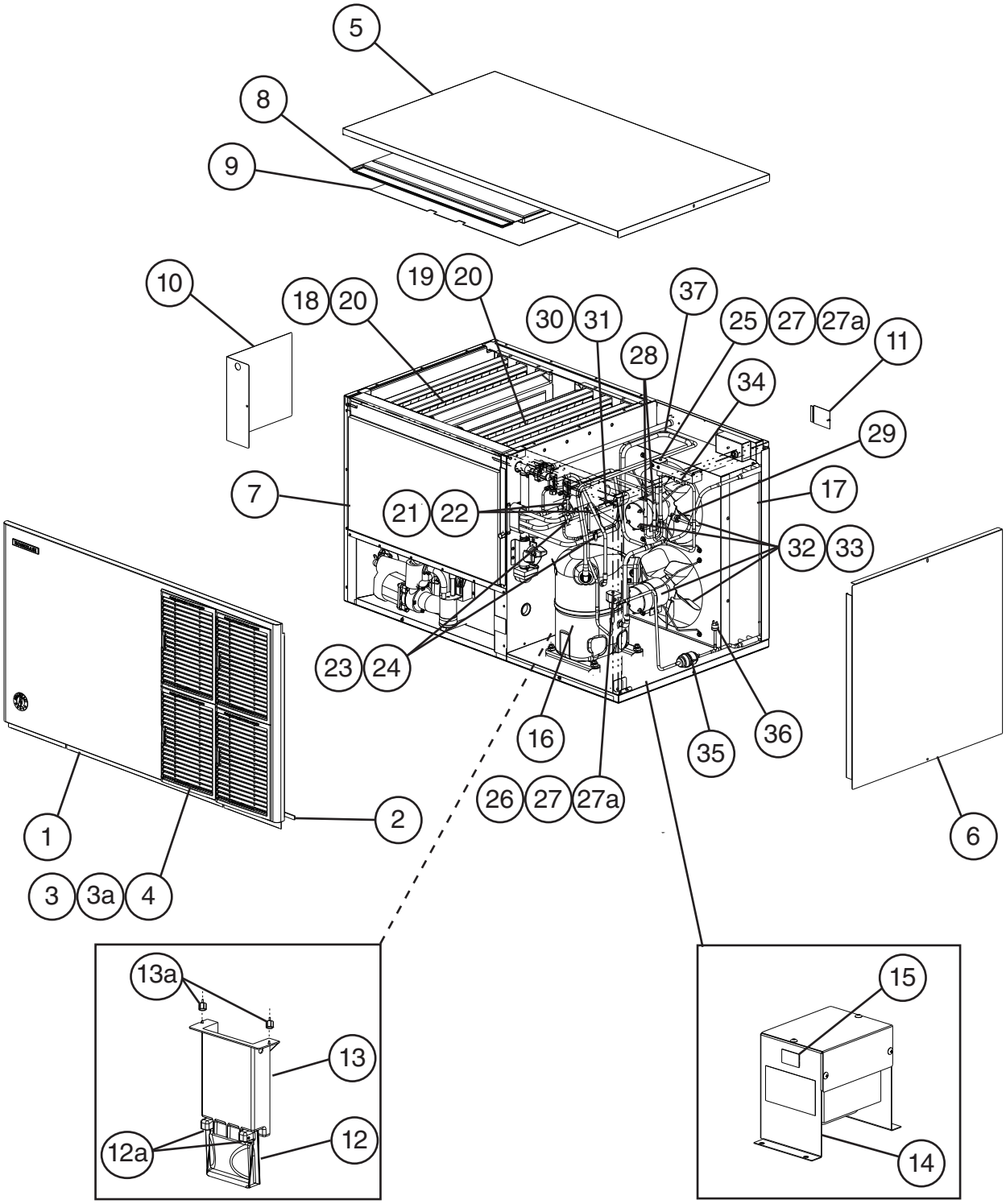

Main Transformer Box Assembly

KM-1601SAJ3

A. Ice Cuber Assembly & Refrigeration Circuit
KM-1601SAJ/3
2/2
N-3(K) to R-0

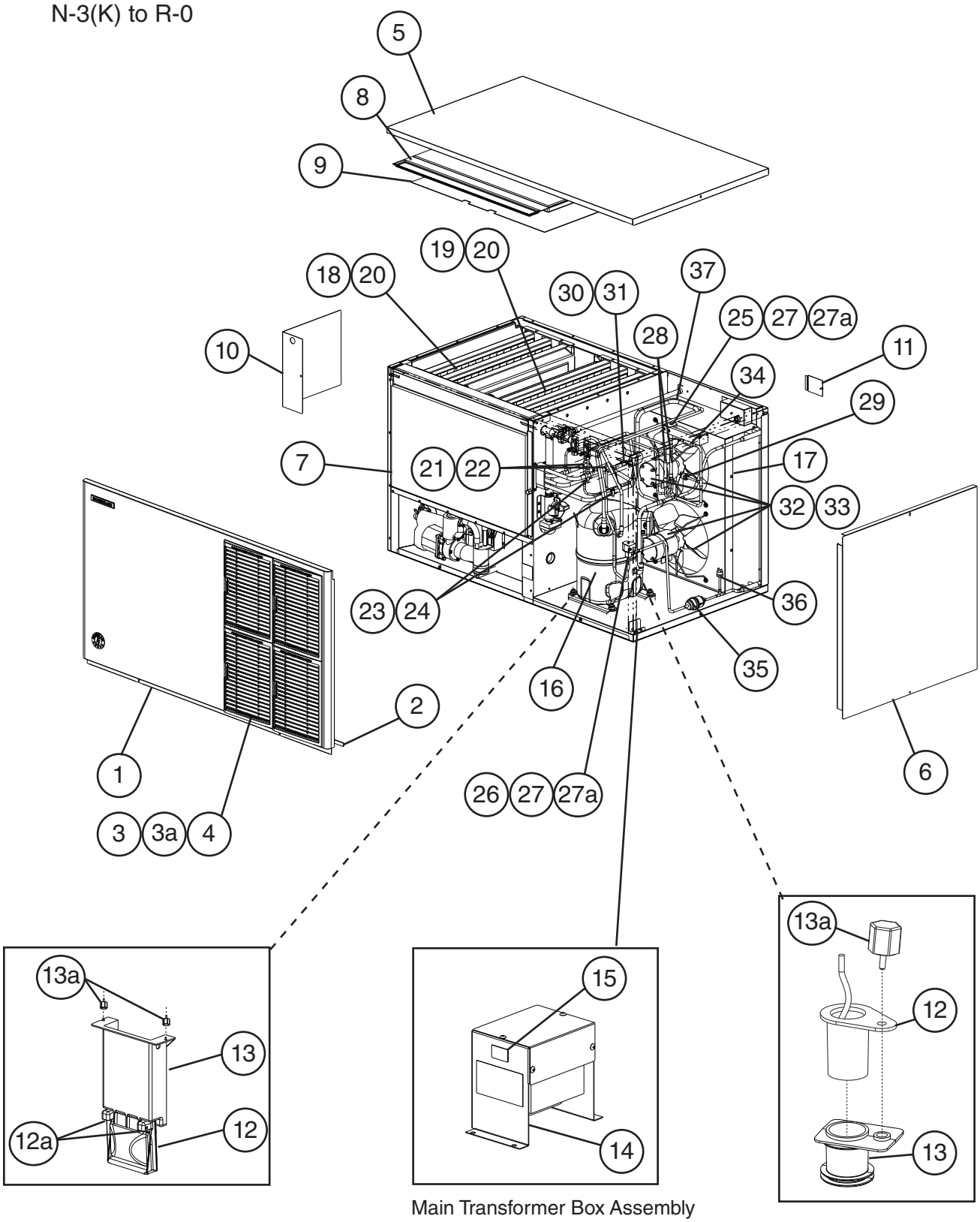

Main Transformer Box Assembly

KM-1601SAJ3

Title: A. Ice Cuber Assembly & Refrigeration Circuit Model: KM-1601SAJ/3												
				Required Number								
Index No.	Description	Material or Model Number	Part Number	F-0 to N-3 (J)	N-3 (K) to Q-0	Q-2 R-0						
Ice Cuber Assembly												
1	Front Panel		3B2117G02	1	1	1						
2	Gasket		4A0808L02	1	1	1						
3	Louver		2A6649A02	4	4	4						
3a	Push Retainer		4A2414-01	12	12	12						
4	Air Filter		2A2063G01	4	4	4						
5	Top Panel		2A2255-01	1	1	1						
6	Right Side Panel		2A2226G01	1	1	1						
7	Front Insulation		324215G01	1	1	1						
8	Top Insulation		324216G01	1	1	1						
9	Spacer		324321-01	1	1	1						
10	Control Box Cover		3A2386-03	1	1	-						
			3B2171-01			1						
11	Junction Box Cover		433410-01	1	1	1						
12	Mechanical Bin Control		2A8598G01	1	1	-						
	Ultrasonic Bin Control		4A6148G02			1						
12a	Thumbscrew		415949G12	2	2	-						
13	Bin Control Extension Bracket		3A5726-01	1	1	-						
	Ultrasonic Sensor Holder		4A7285-01			1						
13a	Thumbscrew		415949G12	3	3	-						
			415949G10			1						
14	Main Transformer	**KM-1601SAJ3**	4A5695-01	1	1	1						
15	Voltage Tap Switch	**KM-1601SAJ3**	4A1477-01	1	1	1						
Refrigeration Circuit												
16	Compressor	**KM-1601SAJ**	4A4581-01	1	1	1						
		KM-1601SAJ3	4A4582-01	1	1	1						
17	Condenser		2A7966-01	1	1	1						
18	Left Evaporator Bank (includes 4 of item 21)		SP-5430	1	1	1						
19	Right Evaporator Bank (includes 4 of item 21)		SP-5431	1	1	1						
20	Separator Hook		324152-01	8	8	8						
21	Thermostatic Expansion Valve		4A5847-01	2	2	2						
22	Thermostatic Expansion Valve Cover		3A0944-01	2	2	2						
23	Thermostatic Expansion Valve Bulb Holder		3A0107-01	2	2	2						
24	Clamp		443461-02	2	2	2						
25	Hot Gas Valve Body		4A3978-01	1	1	1						
26	Liquid Line Valve Body		4A3276-01	1	1	1						
27	Valve Coil		4A3277-01	2	2	2						
27a	Bolt		4A3277F01	2	2	2						
28	Check Valve		4A1373-01	2	2	2						
29	High-Pressure Switch		463180-01	1	1	1						
30	Thermistor		429006-03	1	1	1						
31	Thermistor Holder		427430-01	1	1	1						

Title: A. Ice Cuber Assembly & Refrigeration Circuit Model: KM-1601SAJ/3												
				Required Number								
Index No.	Description	Material or Model Number	Part Number	F-0 to N-3 (J)	N-3 (K) to Q-0	Q-2 R-0						
32	Fan Motor		4A6115-01	2	2	2						
33	Fan Blade		4A3959-01	2	2	2						
34	Strainer		441569-04	1	1	1						
35	Drier		4A1113-01	1	1	1						
36	Fan Speed Pressure Switch		4A5918-01	1	1	1						
37	Heat Exchanger		2A9000G01	1	1	1						

A. Ice Cuber Assembly & Refrigeration Circuit
KM-1601SWJ/3
1/2

N-3(J) and Earlier

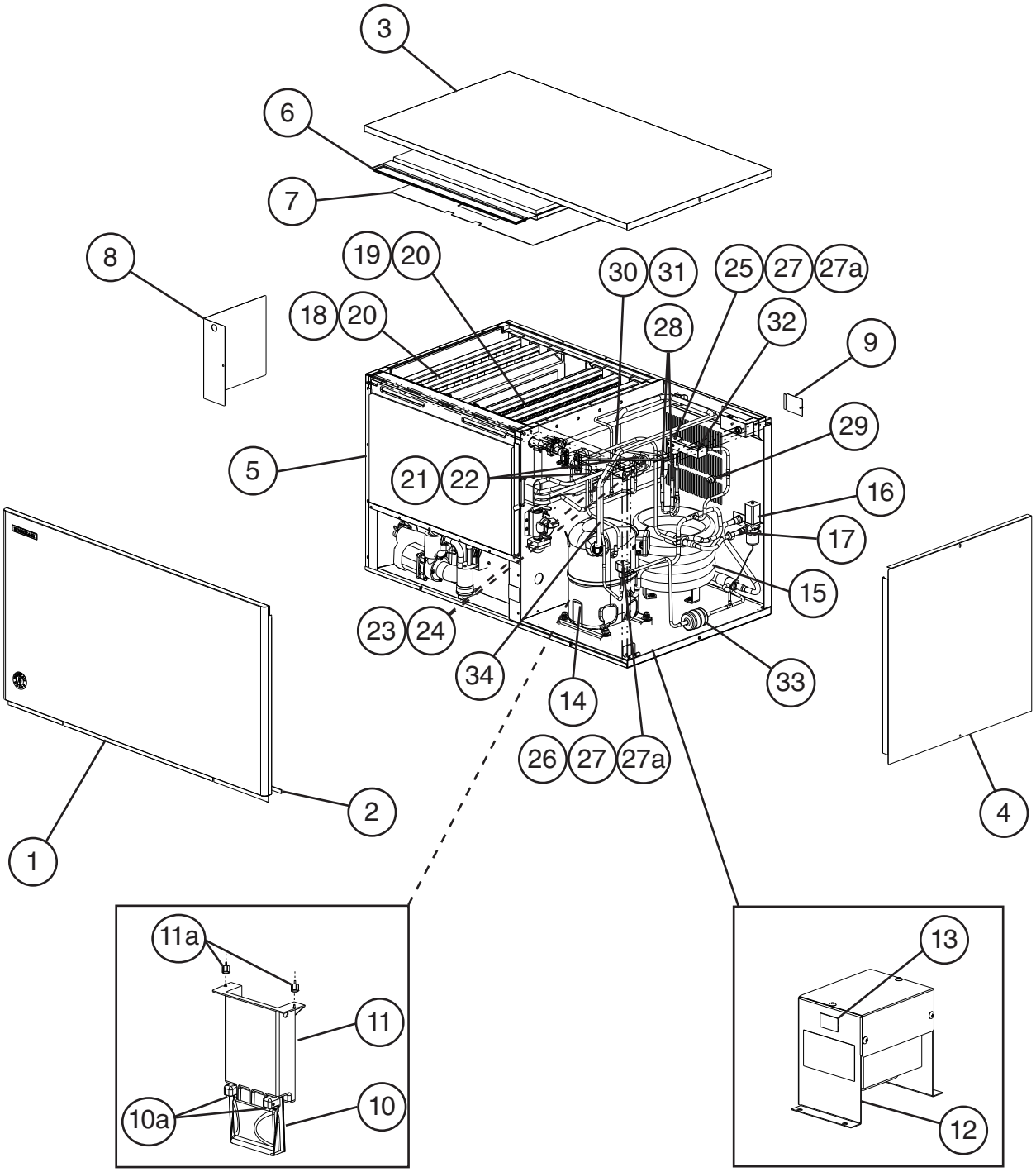

Main Transformer Box Assembly

KM-1601SWJ3

A. Ice Cuber Assembly & Refrigeration Circuit
KM-1601SWJ/3
2/2

N-3(K) to R-0

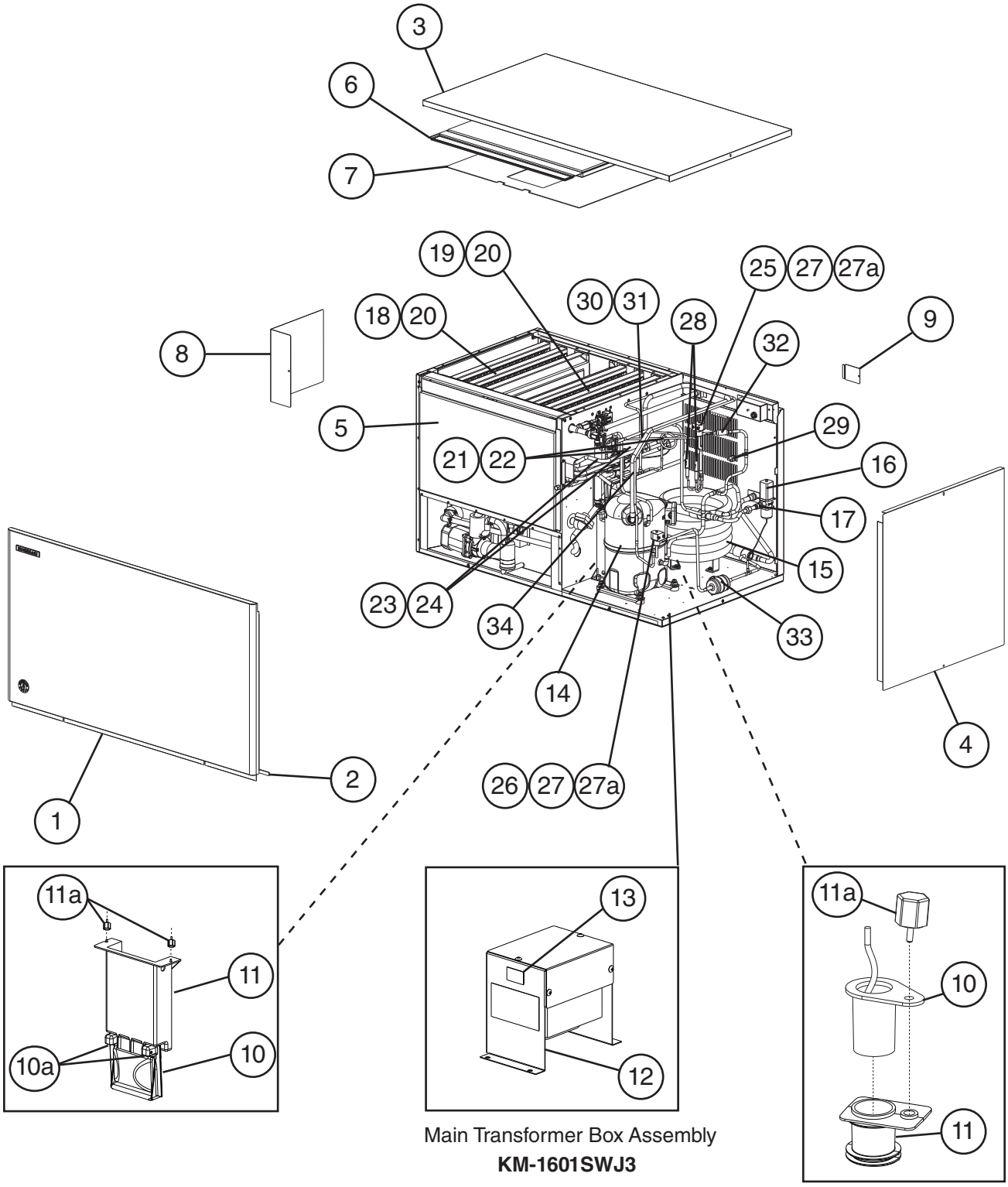

Main Transformer Box Assembly
KM-1601SWJ3

Title: A. Ice Cuber Assembly & Refrigeration Circuit Model: KM-1601SWJ/3												
				Required Number								
Index No.	Description	Material or Model Number	Part Number	F-0 to N-3 (J)	N-3 (K) to P-2	Q-2 R-0						
Ice Cuber Assembly												
1	Front Panel		3B2117G01	1	1	1						
2	Gasket		4A0808L02	1	1	1						
3	Top Panel		2A2255-01	1	1	1						
4	Right Side Panel		2A2226G01	1	1	1						
5	Front Insulation		324215G01	1	1	1						
6	Top Insulation		324216G01	1	1	1						
7	Spacer		324321-01	1	1	1						
8	Control Box Cover		3A2386-03	1	1	-						
			3B2171-01			1						
9	Junction Box Cover		433410-01	1	1	1						
10	Mechanical Bin Control		2A8598G01	1	1	-						
	Ultrasonic Bin Control		4A6148G02			1						
10a	Thumbscrew		415949G12	2	2	-						
11	Bin Control Extension Bracket		3A5726-01	1	1	-						
	Ultrasonic Sensor Holder		4A7285-01			1						
11a	Thumbscrew		415949G12	3	3	-						
			415949G10			1						
12	Main Transformer	**KM-1601SWJ3**	4A5695-01	1	1	1						
13	Voltage Tap Switch	**KM-1601SWJ3**	4A1477-01	1	1	1						
Refrigeration Circuit												
14	Compressor	**KM-1601SWJ**	4A4581-01	1	1	1						
		KM-1601SWJ3	4A4582-01	1	1	1						
15	Condenser		3A7324-01	1	1	1						
16	Water Regulating Valve		4A0911-07	1	1	1						
17	Male Connector		4A1087-01	1	1	1						
18	Left Evaporator Bank (includes 4 of item 21)		SP-5430	1	1	1						
19	Right Evaporator Bank (includes 4 of item 21)		SP-5431	1	1	1						
20	Separator Hook		324152-01	8	8	8						
21	Thermostatic Expansion Valve		4A5847-01	2	2	2						
22	Thermostatic Expansion Valve Cover		3A0944-01	2	2	2						
23	Thermostatic Expansion Valve Bulb Holder		3A0107-01	2	2	2						
24	Clamp		443461-02	2	2	2						
25	Hot Gas Valve Body		4A3978-01	1	1	1						
26	Liquid Line Valve Body		4A3276-01	1	1	1						
27	Valve Coil		4A3277-01	2	2	2						
27a	Bolt		4A3277F01	2	2	2						
28	Check Valve		4A1373-01	2	2	2						
29	High-Pressure Switch		463180-05	1	1	1						
30	Thermistor		429006-03	1	1	1						
31	Thermistor Holder		438247-01	1	1	1						
32	Strainer		441569-04	1	1	1						
33	Drier		4A1338-01	1	1	1						
34	Heat Exchanger		1A4295G01	1	1	1						

A. Ice Cuber Assembly & Refrigeration Circuit
KM-1601SRJ(Z)/3
1/2

N-3(J) and Earlier

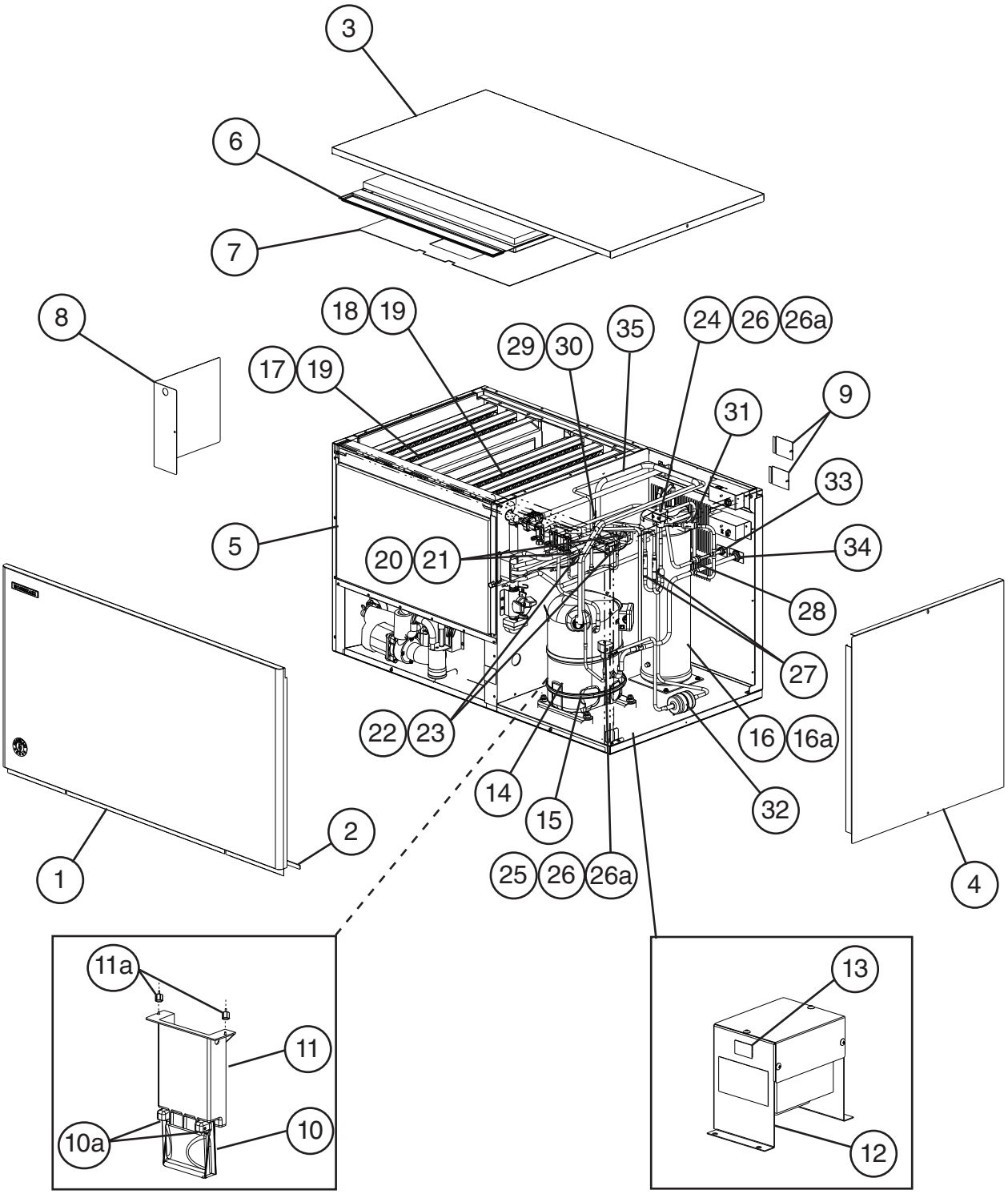

Main Transformer Box Assembly

KM-1601SRJ(Z)3

A. Ice Cuber Assembly & Refrigeration Circuit
KM-1601SRJ(Z)/3
2/2

N-3(K) to R-0

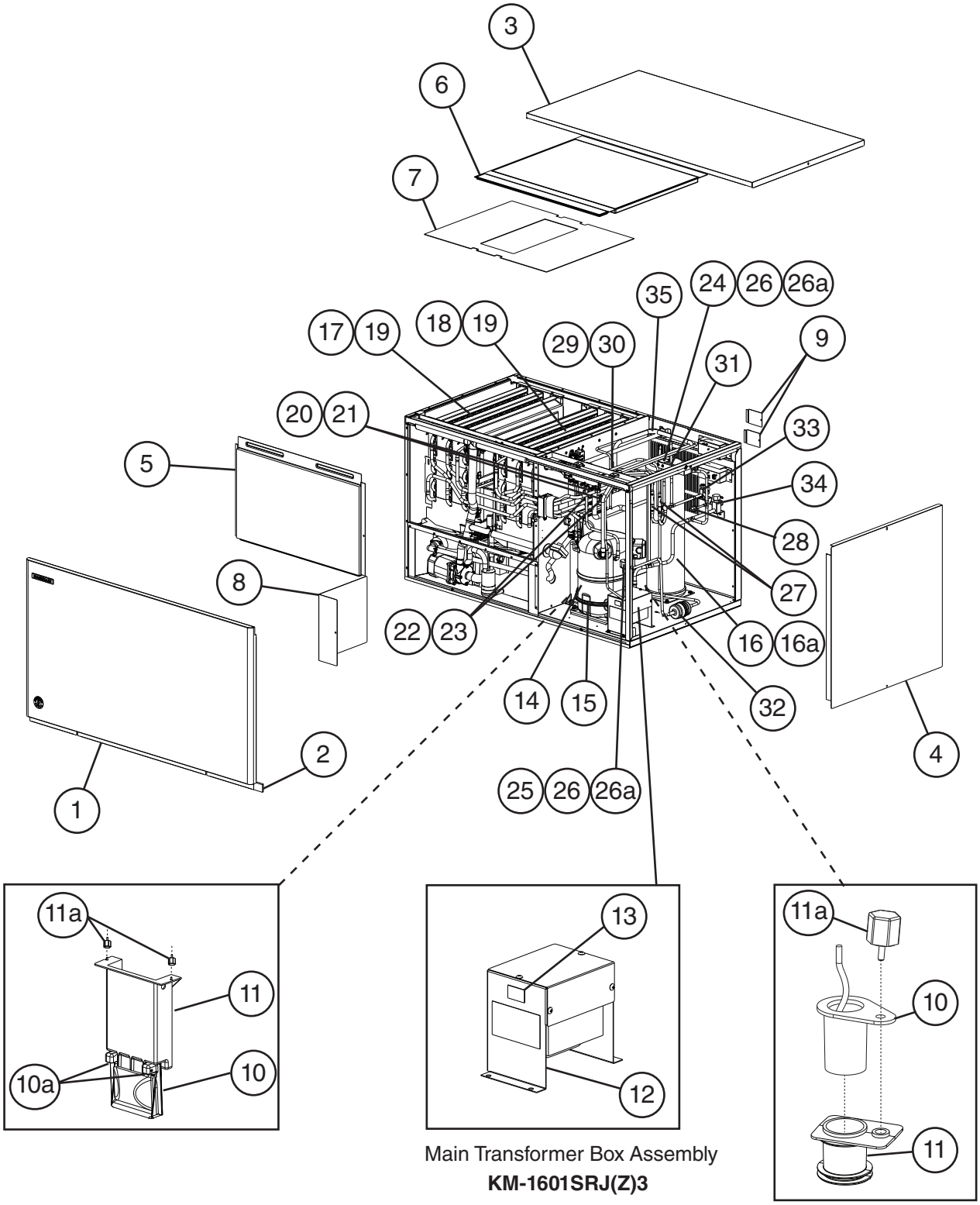

Main Transformer Box Assembly
KM-1601SRJ(Z)3

Title: A. Ice Cuber Assembly & Refrigeration Circuit Model: KM-1601SRJ(Z)/3												
				Required Number								
Index No.	Description	Material or Model Number	Part Number	F-0 to L-0	M-0	M-1 to N-3 (J)	N-3 (K) to Q-0	Q-2 R-0				
Ice Cuber Assembly												
1	Front Panel		3B2117G01	1	1	1	1	1				
2	Gasket		4A0808L02	1	1	1	1	1				
3	Top Panel		2A2255-01	1	1	1	1	1				
4	Right Side Panel		2A2226G01	1	1	1	1	1				
5	Front Insulation		324215G01	1	1	1	1	1				
6	Top Insulation		324216G01	1	1	1	1	1				
7	Spacer		324321-01	1	1	1	1	1				
8	Control Box Cover	**KM-1601SRJ**	3A2386-01	1	1	1	1	1				
		KM-1601SRJ(Z)/3	3B2171-01					1				
9	Junction Box Cover		433410-01	2	2	2	2	2				
10	Mechanical Bin Control	**KM-1601SRJ/3**	2A8598G01	1	1	1	1	-				
	Ultrasonic Bin Control		4A6148G02					1				
10a	Thumbscrew	**KM-1601SRJ/3**	415949G12	2	2	2	2	-				
11	Bin Control Extension Bracket	**KM-1601SRJ/3**	3A5726-01	1	1	1	1	-				
	Ultrasonic Sensor Holder		4A7285-01					1				
11a	Thumbscrew	**KM-1601SRJ/3**	415949G12	3	3	3	3	-				
			415949G10					1				
12	Main Transformer	**KM-1601SRJ(Z)/3**	4A5695-01	1	1	1	1	1				
13	Voltage Tap Switch	**KM-1601SRJ(Z)/3**	4A1477-01	1	1	1	1	1				
Refrigeration Circuit												
14	Compressor	**KM-1601SRJ(Z)**	4A4581-01	1	1	1	1	1				
		KM-1601SRJ(Z)/3	4A4582-01	1	1	1	1	1				
15	Crankcase Heater		4A5397-02	1	1	1	1	1				
16	Receiver		4A6215-01	1	1	1	1	1				
16a	Hex Bolt	5×10	7B0130510	3	3	3	3	3				
17	Left Evaporator Bank (includes 4 of item 20)		SP-5430	1	1	1	1	1				
18	Right Evaporator Bank (includes 4 of item 20)		SP-5431	1	1	1	1	1				
19	Separator Hook		324152-01	8	8	8	8	8				
20	Thermostatic Expansion Valve		4A5847-01	2	2	2	2	2				
21	Thermostatic Expansion Valve Cover		3A0944-01	2	2	2	2	2				
22	Thermostatic Expansion Valve Bulb Holder		3A0107-01	2	2	2	2	2				
23	Clamp		443461-02	2	2	2	2	2				
24	Hot Gas Valve Body		4A3978-01	1	1	1	1	1				
25	Liquid Line Valve Body		4A3276-01	1	1	1	1	1				
26	Valve Coil		4A3277-01	2	2	2	2	2				
26a	Bolt		4A3277F01	2	2	2	2	2				
27	Check Valve		4A2054-01	2	2	2	2	2				

Title: A. Ice Cuber Assembly & Refrigeration Circuit Model: KM-1601SRJ(Z)/3												
				Required Number								
Index No.	Description	Material or Model Number	Part Number	F-0 to L-0	M-0	M-1 to N-3 (J)	N-3 (K) to Q-0	Q-2 R-0				
28	High-Pressure Switch		463180-04	1	1	1	1	1				
29	Thermistor		429006-03	1	1	1	1	1				
30	Thermistor Holder		438247-01	1	1	1	1	1				
31	Strainer		441569-04	1	1	1	1	1				
32	Drier		4A1338-01	1	1	1	1	1				
33	Liquid Line Coupling		426554-01	1	-							
	Liquid Line Service Valve	**KM-1601SRJ(Z)/3**	4A3491-01		1	1	1	1				
34	Discharge Line Coupling		434072-01	1	-							
	Discharge Line Service Valve		4A4822-01		1	-						
		KM-1601SRJ(Z)/3	4A3490-01			1	1	1				
35	Heat Exchanger		1A4295G01	1	1	1	1	1				

B. Water Circuit

KM-1601S_J(Z)/3

1/2

N-3(J) and Earlier

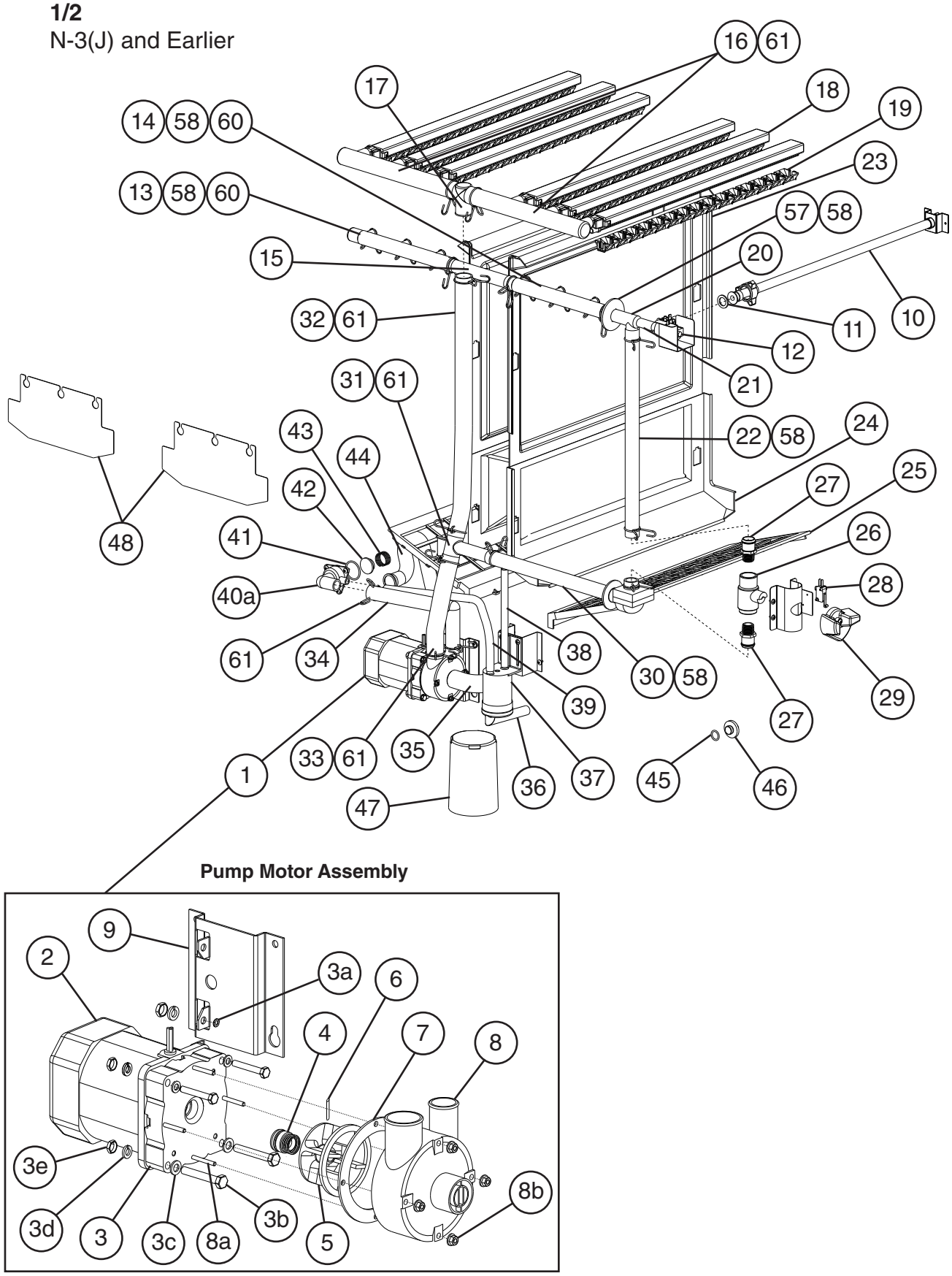

B. Water Circuit

KM-1601S_J(Z)/3

2/2

N-3(K) to R-0

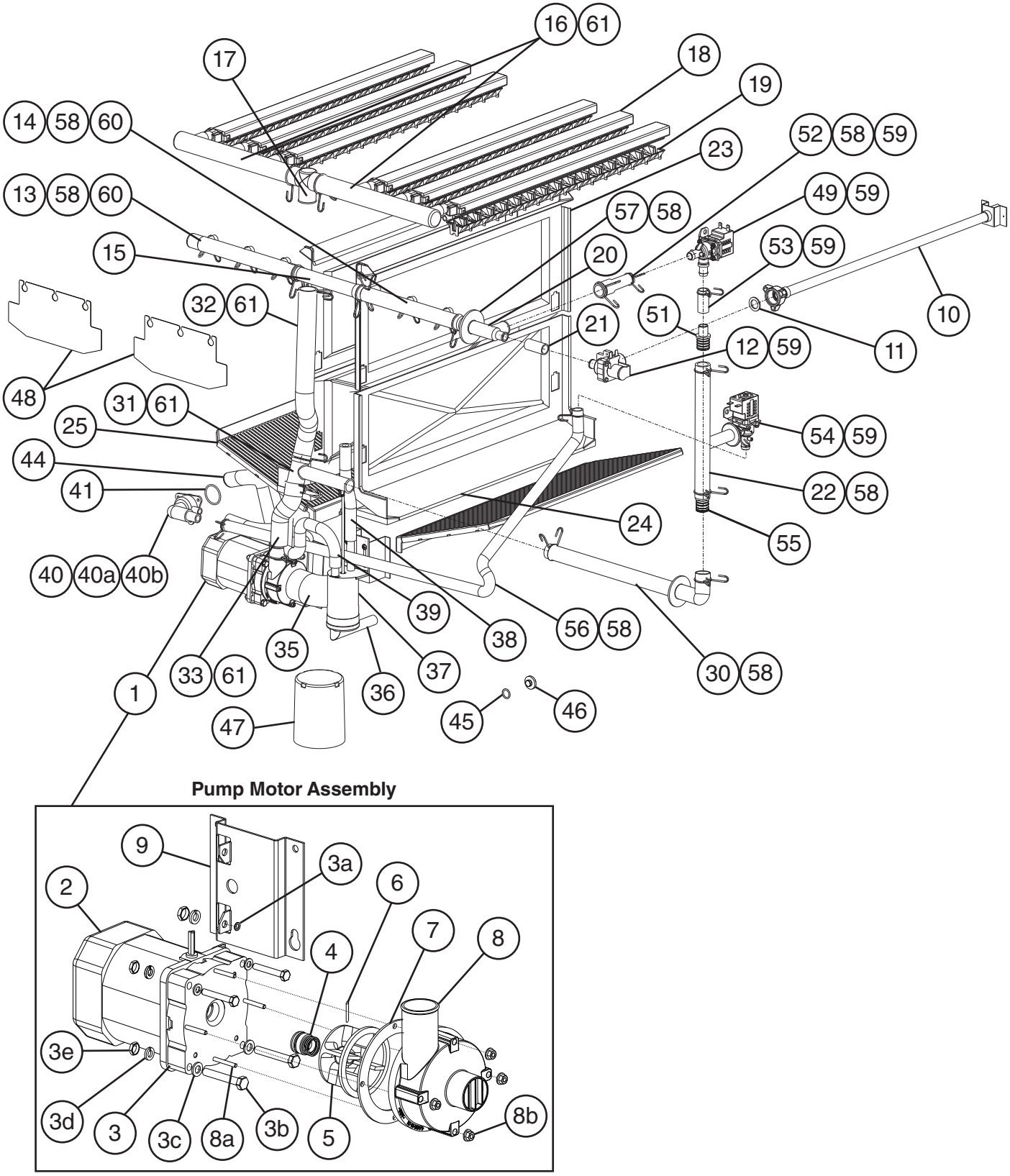

Pump Motor Assembly

Title: B. Water Circuit Model: KM-1601S_J(Z)/3												
				Required Number								
Index No.	Description	Material or Model Number	Part Number	F-0 to N-3 (J)	N-3 (K) to P-0	P-1 to P-4	Q-0 to R-0					
1	Pump Motor Assembly (includes items 2 through 9)	SP-0730	215692A03	1	-							
			2B0567A01		1	1	1					
2	Pump Motor		4A7462-01	1	1	1	1					
3	Pump Flange		215662-01	1	1	1	1					
3a	Tooth Washer		7R22-0600	2	2	2	2					
3b	Flat Washer		7W22-0600	4	4	4	4					
3c	Split Lock Washer		7L22-0600	4	4	4	4					
3d	Hex Nut		7N12-0600	4	4	4	4					
3e	Hex Head Bolt	6×40	7B02-0640	4	4	4	4					
4	Mechanical Seal		4A3820-03	1	1	1	1					
5	Impeller		436584-01	1	1	1	1					
6	Pin		4A0648-01	1	1	1	1					
7	Packing		428547-01	1	1	1	1					
8	Pump Housing		213687-01	1	-							
			4A6641-01		1	1	1					
8a	Hex Head Bolt	4×55	7B02-0455	4	4	4	4					
8b	Hex Flange Nut		7J02-0400	4	4	4	4					
9	Pump Motor Bracket		323904-01	1	1	1	1					
10	Water Supply Pipe		4A5216G04	1	1	1	1					
11	Rubber Gasket		413854-03	1	1							
12	Inlet Water Valve		3U0111-01	1	1	-	1					
			3B1433-01			1	-					
13	Distributor Hose A		325738-01	1	1	1	1					
14	Distributor Hose B		325738-02	1	1	1	1					
15	Joint Pipe		439297-01	1	1	1	1					
16	Distributor Hose C		325739-01	2	2	2	2					
17	Distributor A (Tee)		439266-01	1	1	1	1					
18	Spray Tube		437049G01	6	6	6	6					
19	Spray Guide		2A4282-02	6	6	6	6					
20	Distributor B (Tee)		439239-01	1	1	1	1					
21	Vinyl Hose	L= 40 mm	7716-1216	1	-							
		L= 80 mm	7716B1216		1	1	1					
22	Joint Hose	**KM-1601SRJ**	439309-02	1	-							
			2A8823-01		1	1	1					
23	Separator A		213622-01	2	2	2	2					
24	Separator B		2A0100-01	2	2	2	2					
25	Cube Guide		214243-01	2	2	2	2					
26	Cleaning Valve Ball Valve		439293-01	1								
27	Cleaning Valve Male Adapter		325826-01	2								
28	Cleaning Valve Microswitch		4A2546-01	1								
29	Cleaning Valve Handle		215383-01	1								
30	Bypass Hose		439237-02	1	1	1	1					
31	Distributor C (Tee)		439238-01	1	1	1	1					
32	Vinyl Hose	L= 385 mm	7716-2732	1	-							
		L= 350 mm	7716B2732		1	1	1					
33	Vinyl Hose	L= 170 mm	7716B2732	1	1	1	1					

Title: B. Water Circuit Model: KM-1601S_J(Z)/3												
				Required Number								
Index No.	Description	Material or Model Number	Part Number	F-0 to N-3 (J)	N-3 (K) to P-0	P-1 to P-4	Q-0 to R-0					
34	Drain Hose		436599-01	1								
35	Hose A		435091-01	1	1	1	1					
36	Float Switch Connector		426799-04	1	1	1	1					
37	Float Switch Assembly		4A7077G01	1	1	1	1					
38	Silicone Hose	L= 140 mm	7730I3896	1	1	1	1					
39	Silicone Hose	L= 390 mm	7730I3896	1	-							
		L= 365 mm	7730I3896		1	1	1					
40	Drain Valve Housing Assembly		3B1598G01		1	1	1					
40a	Drain Valve Housing		323613-01	1	1	1	1					
40b	Joint Pipe		4A6286-01		1	1	1					
41	Drain Valve O-Ring		7611-G035	1	1	1	1					
42	Drain Valve Seat		433705-01	1								
43	Drain Valve Spring		322110-01	1								
44	Hose B		324757-01	1	-							
			325867-02	1	1	1	1					
45	Drain Plug O-Ring		7611-P015	1	1	1	1					
46	Drain Plug		309246-01	1	1	1	1					
47	Overflow Cap		323978-01	1	1	1	1					
48	Splash Guard		4A6116-01	2	2	2	2					
49	Cleaning Valve		4A5745-06		1	1	1					
50	Vinyl Hose	L= 40 mm	7716B1216		1	1	1					
51	Adapter Fitting		4A7351-01		2	2	1					
52	Vinyl Hose	L= 60 mm	7716B2025		1	1	-					
			3B1462-01				1					
53	Vinyl Hose	L= 40 mm	7716B1216		1	1	1					
54	Drain Valve		4A5745-07		1	1	1					
55	Adapter Fitting		2A8823-03		1	1	1					
56	Vinyl Hose	L= 930 mm	7716B1519		1	1	1					
57	Flange		439267-02	1	1	1	1					
			Hose Clamps									
58	Hose Clamp	25 mm	427443-03	9	9	9	8					
59	Hose Clamp	18 mm	427443-05		6	6	7					
60	Hose Clamp	13.5 mm	427443-07	6	6	6	6					
61	Hose Clamp	32 mm	427443-09	6	6	6	6					

C. Control Box Assembly
KM-1601S_J(Z)/3
1/2

N-3(J) and Earlier

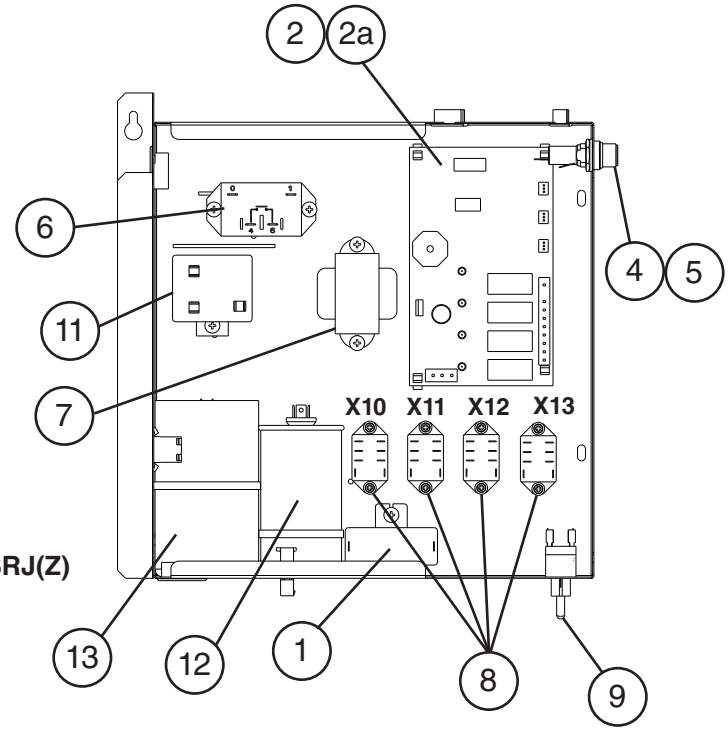

Model Shown: KM-1601SRJ(Z)

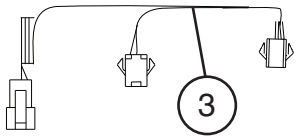

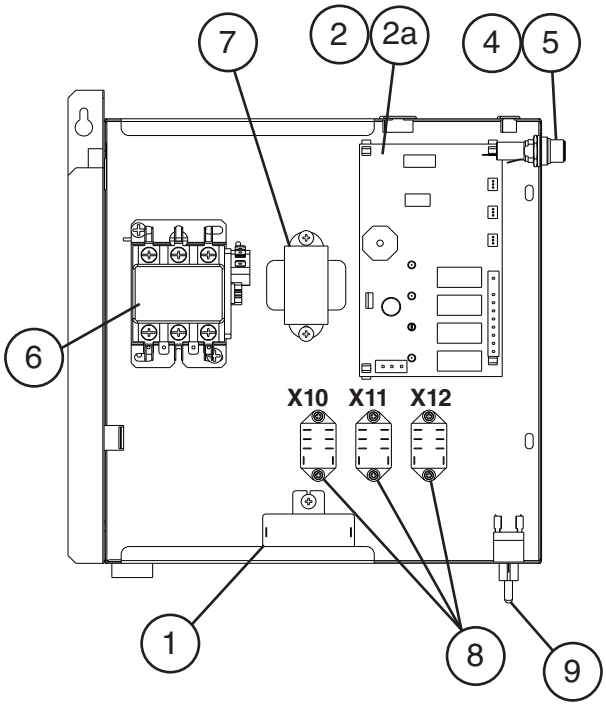

Model Shown: KM-1601SRJ(Z)3

C. Control Box Assembly
KM-1601S_J(Z)/3
2/2

N-3(K) to R-0

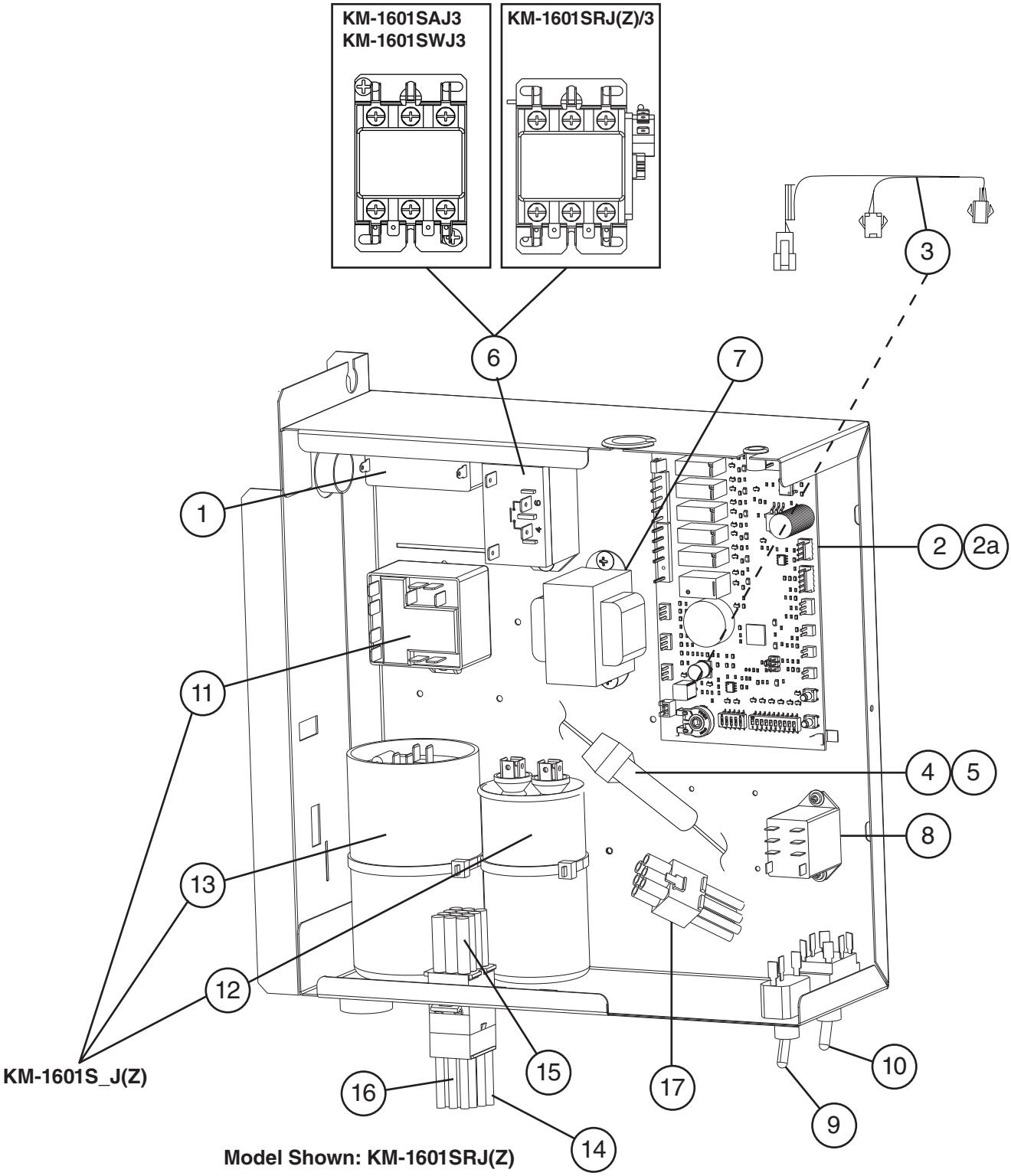

Model Shown: KM-1601SRJ(Z)

Title: C. Control Box Assembly Model: KM-1601S_J(Z)/3												
				Required Number								
Index No.	Description	Material or Model Number	Part Number	F-0 to N-3 (J)	N-3 (K) to P-4	Q-0 to R-0						
1	Pump Motor Capacitor	15MFD, 240VAC	439705-01	1	1	1						
2	Control Board	**KM-1601SRJ/3**	2A7664-04	1	-							
			2A9678-02		1	1						
2a	Control Board Support		4A0336-03	4	4	4						
3	Wire Harness	**KM-1601SRJ/3**	4A5197G01	1	1	1						
		KM-1601SAJ/3 **KM-1601SRJZ/3** **KM-1601SWJ/3**	4A7670G01			1						
		KM-1601SRJZ/3 **KM-1601SWJ/3**	4A7671G01			1						
4	Fuse	AGC-10A, 250VAC **KM-1601SRJ/3**	4A0893-07	1	1	1						
5	Fuse Holder	**KM-1601SRJ/3**	4A5443-01	1	-							
	In-Line Fuse Holder		4A6950-01		1	1						
6	Compressor Relay	**KM-1601S_J(Z)**	4A3140-01	1	1	1						
	Magnetic Contactor	**KM-1601SAJ3** **KM-1601SWJ3**	4A0794-02	1	1	1						
		KM-1601SRJ(Z)/3	4A0794-01	1	1	1						
7	Control Transformer		3A0172-01	1	1	1						
8	Relay X10=Pump Direction Relay X11=X10 Control Relay X12=Slush Control Relay		406132-07	3								
	X13=Crankcase Heater Relay	**KM-1601SRJ(Z)/3**		1	1	1						
9	Control Switch	**KM-1601SRJ/3**	443119-01	1	-							
		KM-1601SWJ/3	4A0985-01		1	1						
10	Mode Switch	**KM-1601SRJZ3** **KM-1601SWJ/3**	4A6232-01		1	1						
11	Start Relay	**KM-1601S_J(Z)**	4A1107-09	1	1	1						
12	Run Capacitor	**KM-1601S_J(Z)** 35MFD, 440VAC	3A2005-12	1	1	1						
13	Start Capacitor	**KM-1601S_J(Z)** 189-227MFD, 330VAC	3A0076-12	1	1	1						

Title: C. Control Box Assembly Model: KM-1601S_J(Z)/3												
				Required Number								
Index No.	Description	Material or Model Number	Part Number	F-0 to N-3 (J)	N-3 (K) to P-4	Q-0 to R-0						
14	Noise Killer (Capacitor not shown)	**KM-1601SAJ/3**	4A6495-01			1						
15	Wire Harness A - (includes item 4 and 5)		1A5695-01		1	-						
		KM-1601SAJ KM-1601SRJZ KM-1601SWJ	1A7314-01			1						
		KM-1601SAJ3 KM-1601SRJZ/3 KM-1601SWJ3	1A7315-01			1						
16	Wire Harness B		1A5696-01		1	-						
		KM-1601SAJ/3 KM-1601SRJZ/3 KM-1601SWJ/3	1A7316-01			1						
17	Wire Harness C	**KM-1601SAJ KM-1601SRJZ/3**	1A5697-01		1	1						
18	Wire Harness D (not shown)	**KM-1601S_J(Z)3**	1A5760-01		1	-						
19	Compressor Wire Harness (not shown)	**KM-1601SAJ**	1A4899-01		1	1						
		KM-1601SAJ3	1A4899-02			1						

D. Accessories and Labels
KM-1601S_J(Z)/3
F-0 to R-0

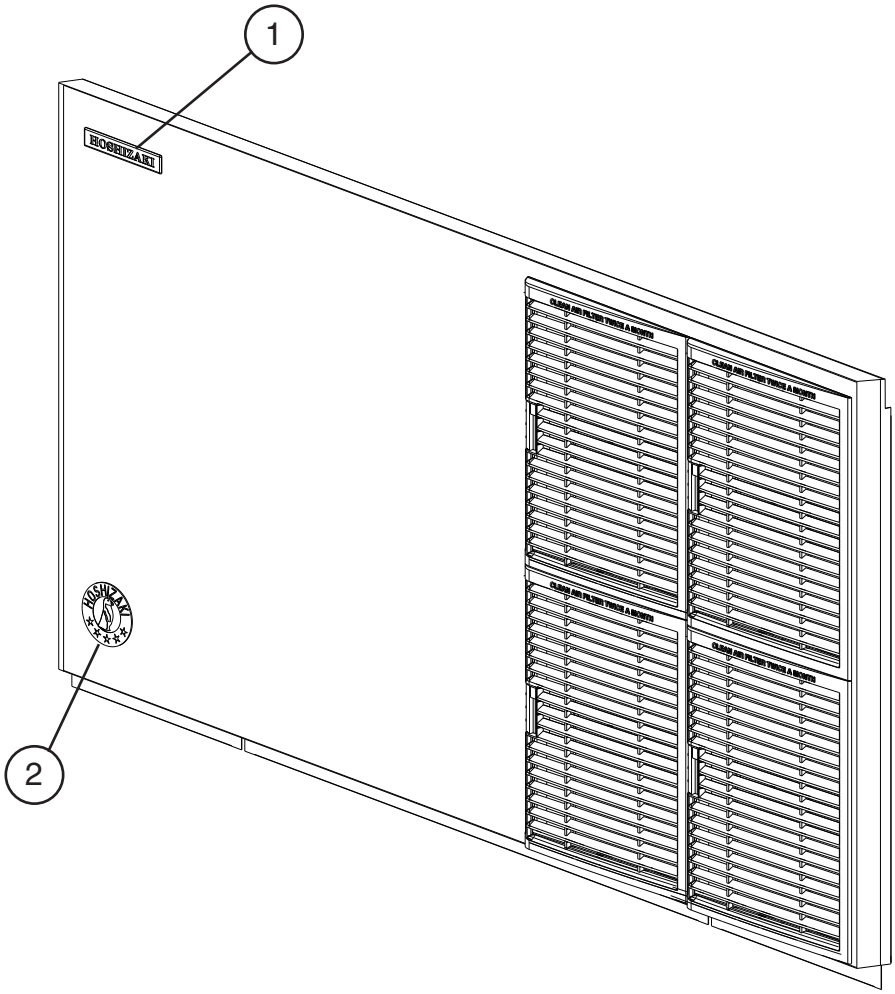

Title: D. Accessories and Labels Model: KM-1601S_J(Z)/3												
				Required Number								
Index No.	Description	Material or Model Number	Part Number	F-0 to R-0								
1	Hoshizaki Emblem		4A0560-01	1								
2	Penguin Label		475552L02	1								
3	Universal Brace		4A0363-01	2								
3a	Hex Head Bolt	5×12	7B02-0512	4								