HOSHIZAKI

Parts List

Modular Crescent Cuber

Models
KM-901MAJ
KM-901MWJ
KM-901MRJ(Z)/3

hoshizakiamerica.com

Number: 71391
Issued: 10-23-2017
Revised: 7-24-2026

CONTENTS

Auxiliary Codes 3
Note About Ordering Parts 4
A. Main Assembly & Refrigeration Circuit 5
KM-901MAJ 5
KM-901MWJ 9
KM-901MRJ(Z)/3 13
KM-901MRJZ/3 14
B. Water Circuit 17
C. Control Box Assembly 21
D. Accessories & Labels 25

Auxiliary Codes

KM-901MAJ

G-0	May 2017
G-1	October 2017
H-0	January 2018
H-1	March 2018
H-2	September 2018
J-0	January 2019
K-0	January 2020
K-1	April 2020
L-0	January 2021
L-1	April 2021
L-2	June 2021
L-3	August 2021
L-4	September 2021
M-0	February 2022
N-0	January 2023
N-1	September 2023
P-0	January 2024
P-2	July 2024
P-4	October 2024
Q-0	January 2025
Q-1	Feburary 2025
Q-2	September 2025

KM-901MWJ

G-0	May 2017
G-1	December 2017
H-0	January 2018
H-1	April 2018
H-2	October 2018
J-0	January 2019
K-0	January 2020
K-1	April 2020
L-0	January 2021
L-1	April 2021
L-2	June 2021
L-3	August 2021
L-4	September 2021
M-0	February 2022
N-0	February 2023
N-1	September 2023
P-0	February 2024
P-2	July 2024
P-3	September 2024
P-4	October 2024
Q-0	Feburary 2025
Q-2	September 2025

KM-901MRJ

G-0	May 2017
G-1	October 2017
H-0	January 2018
H-1	March 2018
H-2	September 2018
J-0	January 2019
K-0	January 2020
K-1	April 2020
L-0	January 2021
L-1	April 2021
L-2	June 2021
L-3	August 2021
L-4	September 2021

KM-901MRJ3

G-0	July 2017
G-1	November 2017
H-0	January 2018
H-1	September 2018
J-0	May 2019
K-0	January 2020
L-0	January 2021
L-1	April 2021
L-2	June 2021
L-3	August 2021
L-4	September 2021
N-1	August 2023

KM-901MRJZ

L-0	November 2021
M-0	February 2022
N-0	January 2023
N-1	September 2023
P-0	January 2024
P-2	July 2024
P-3	September 2024
P-4	October 2024
Q-0	January 2025
Q-2	September 2025
R-0	January 2026
R-1	April 2026

KM-901MRJZ3

M-0	February 2022
N-0	April 2023
N-1	September 2023
P-0	February 2024
P-4	December 2024
Q-0	January 2025
Q-2	September 2025
R-0	January 2026
R-1	May 2026

Auxiliary Code Breakdown

The auxiliary code is the first two characters in the serial number. The first character indicates the year. Years progress or regress in alphabetical order. The series runs from "A" through "V" and the letters "I" and "O" are skipped. The second character indicates significant part changes within a year. Base is "0" and this number advances for each change. In cases where there is a letter in parentheses, this designates the month. This is the last character in the serial number. The series runs from "(A)" through "(M)" and the letter "(I)" is skipped. This designation is only included when identifying a parts change within an auxiliary code.

Note About Ordering Parts

Most assemblies cannot be ordered as complete units; parts in the assemblies generally must be ordered separately.

A. Main Assembly & Refrigeration Circuit

KM-901MAJ

1/2

G-0 to P-2

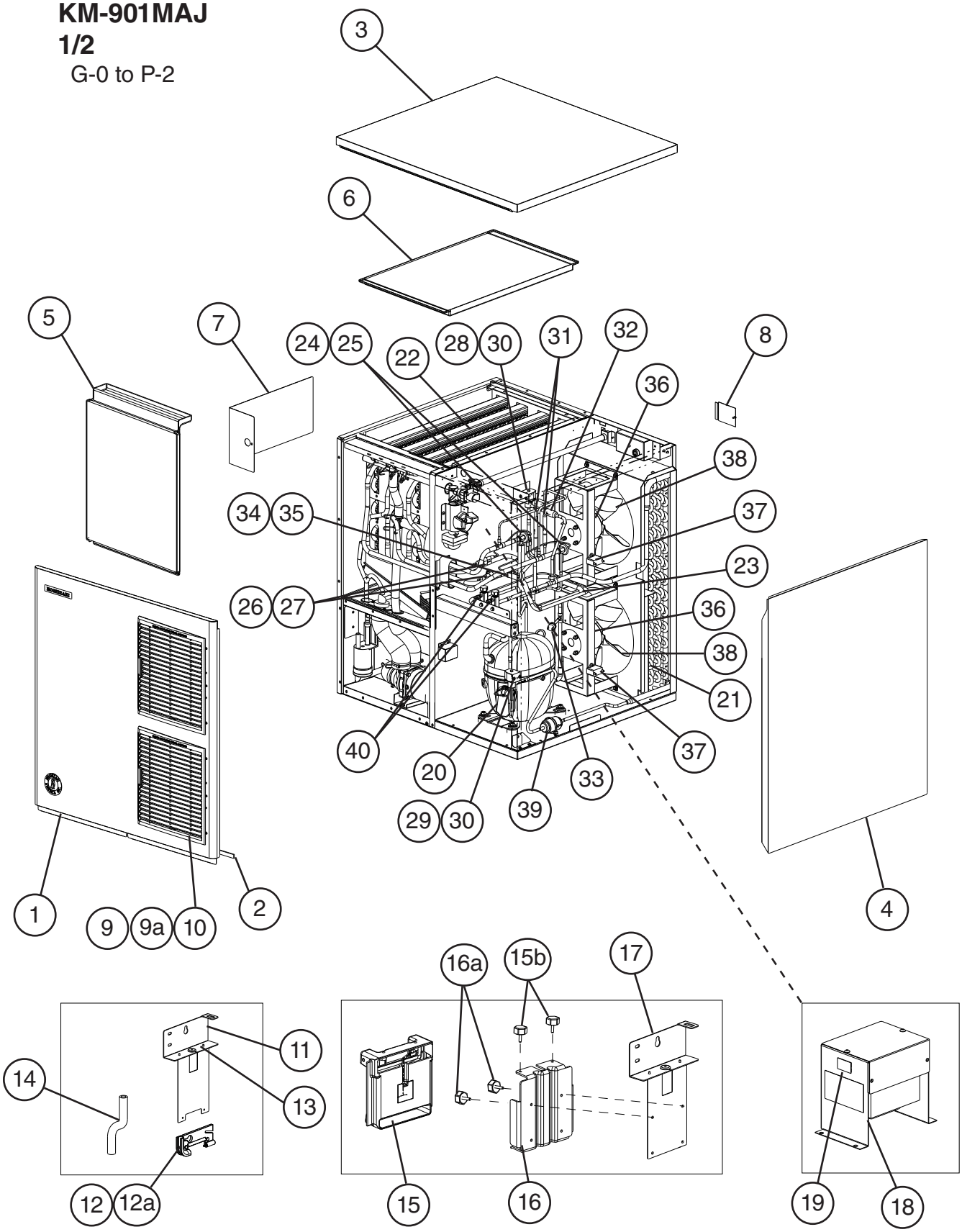

For Bin Control Thermostat, see "C. Control Box Assembly"

A. Main Assembly & Refrigeration Circuit
KM-901MAJ
2/2

P-3 to Q-2

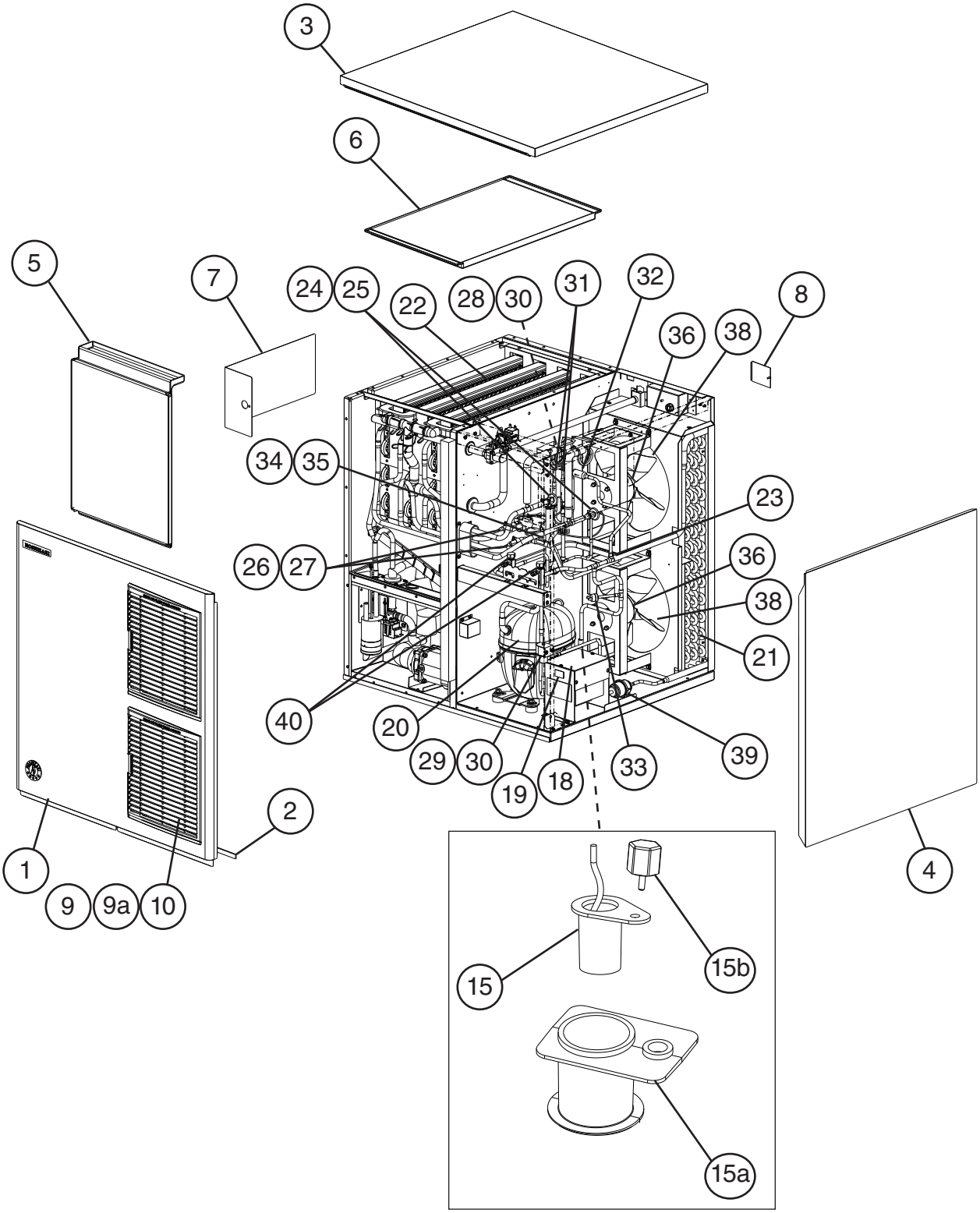

Title: A. Main Assembly & Refrigeration Circuit Model: KM-901MAJ											
				Required Number							
Index No.	Description	Material or Model Number	Part Number	G-0 to L-2	L-3 L-4	M-0 to P-2	P-3 to Q-1	Q-2			
Main Assembly											
1	Front Panel Assembly (includes items 9 through 10 and items 1 and 2 from "D.Accessories and Labels,")		1A6367A01	1	1	1	-				
			1A6367A02				1	1			
2	Gasket	L=762 mm	4A0808L02	1	1	1	1	1			
3	Top Panel Assembly		3A1941A01	1	1	1	1	1			
4	Right Side Panel		1A3617G01	1	1	1	1	1			
5	Front Insulation		3A8392G01	1	1	1	1	1			
6	Top Insulation		322714G01	1	1	1	1	1			
7	Control Box Cover		3A9007-01	1	-						
			3B1113-01		1	1	-				
			3B1942-01				1	1			
8	Junction Box Cover		433410-01	1	1	1	1	1			
9	Louver Assembly		2A6649A01	2	2	2	2	2			
9a	Push Retainer		4A2414-01	6	-						
10	Air Filter		2A2062G01	2	2	2	2	2			
11	Thermostatic Bulb Holder Bracket		322815G02	1	1	-					
12	Thermostatic Bulb Holder		3A3903-01	1	1	-					
12a	Thumbscrew		415949G10	2	2	-					
13	Thermostatic Capillary Tube Bushing		425307-02	1	1	-					
14	Silicone Hose	L=285 mm	7730I3812	1	1	-					
15	Mechanical Bin Control		2A8598G02			1	-				
	Ultrasonic Bin Control		4A6148G01				1	1			
15a	Ultrasonic Sensor Housing		4A7597-01					1			
15b	Thumbscrew		415949G10			2	-				
	Thumbscrew		415949G12				1	1			
16	Mechanical Bin Control Bracket		3A6040-01			1	-				
16a	Thumbscrews		415949G10			2	-				
17	Mechanical Bin Control Extension Bracket		4A7068G01			1	-				
18	Main Transformer		4A5695-01	1	1	1	1	1			
19	Voltage Tap Switch		4A1477-01	1	1	1	1	1			
Refrigeration Circuit											
20	Compressor		3A6900-01	1	1	1	1	1			
21	Condenser		1A4459-01	1	1	1	1	1			
22	Evaporator		1A3820G01	1	1	1	1	1			
23	Heat Exchanger		1A7669G01	1	1	1	1	1			
24	Thermostatic Expansion Valve		4A4008-02	2	2	2	2	2			
25	Thermostatic Expansion Valve Cover		4A6853-01	2	2	2	-				
			3A0944-01				2	2			
26	Thermostatic Expansion Valve Bulb Holder		3A0107-01	2	2	2	2	2			
27	Clamp		443461-02	2	2	2	2	2			
28	Hot Gas Valve Body		4A3978-01	1	1	1	1	1			

Title: A. Main Assembly & Refrigeration Circuit Model: KM-901MAJ											
				Required Number							
Index No.	Description	Material or Model Number	Part Number	G-0 to L-2	L-3 L-4	M-0 to P-2	P-3 to Q-1	Q-2			
29	Liquid Line Valve Body		4A3276-01	1	1	1	1				
30	Valve Coil		4A3277-01	2	2	2	2				
31	Check Valve		4A1373-01	2	2	2	2				
32	Strainer		441569-04	1	1	1	1				
33	High-Pressure Switch		463180-04	1	1	1	1				
34	Thermistor	**SP-5672**	429006-03	1	1	1	1				
35	Thermistor Holder		427430-01	1	1	1	1				
36	Fan Motor		4A3158-01	2	2	2	2				
37	Fan Motor Capacitor	5MFD, 250VAC	4A6435-02	2	2	2					
38	Fan Blade		4A3959-01	2	2	2	2				
39	Drier		4A1113-01	1	1	1	1				
40	Service Valves		4A3420-01	2	2	2	2				

A. Main Assembly & Refrigeration Circuit
KM-901MWJ
1/2

G-0 to P-2

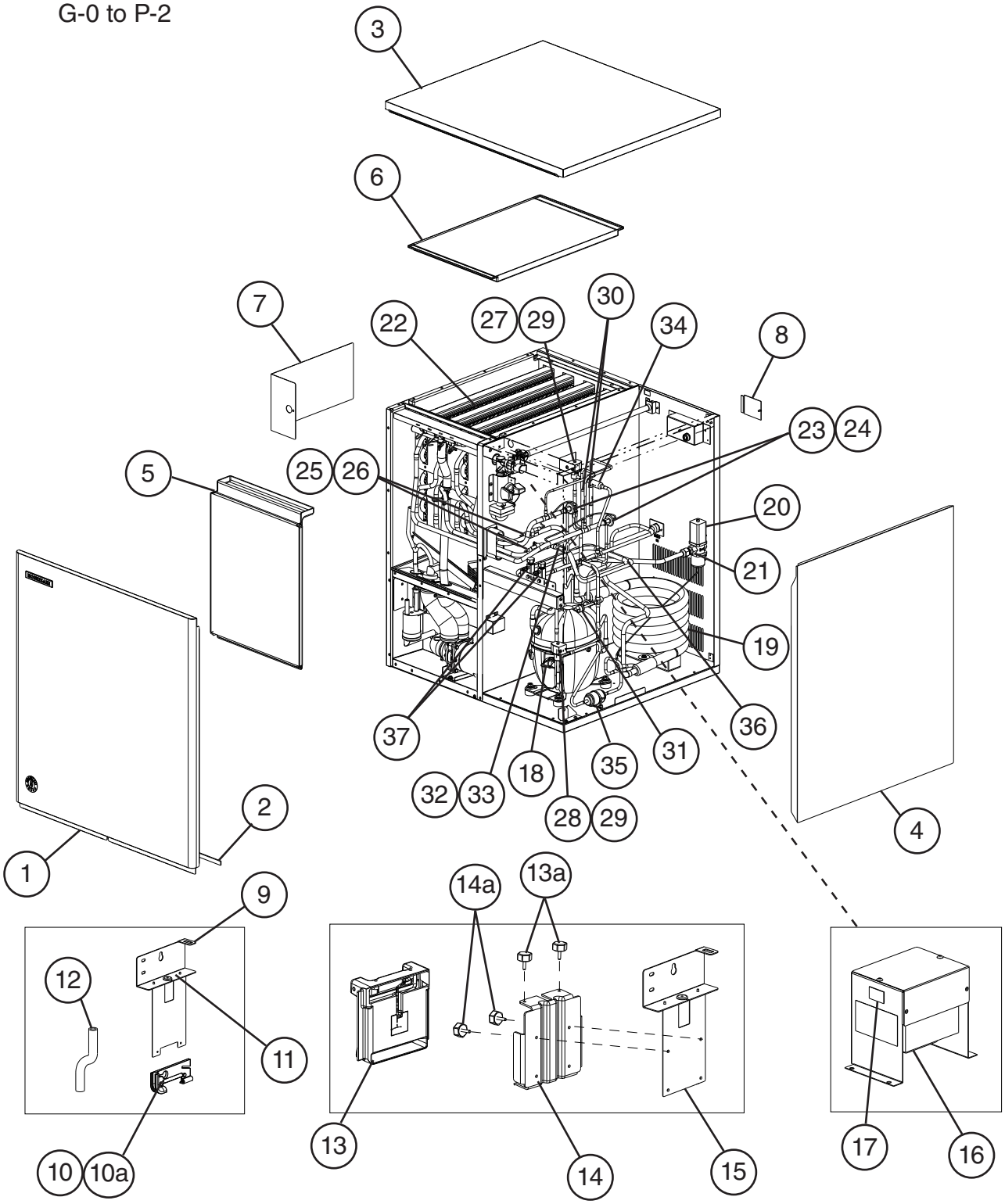

For Bin Control Thermostat, see "C. Control Box Assembly"

A. Main Assembly & Refrigeration Circuit
KM-901MWJ
2/2

P-3 to Q-2

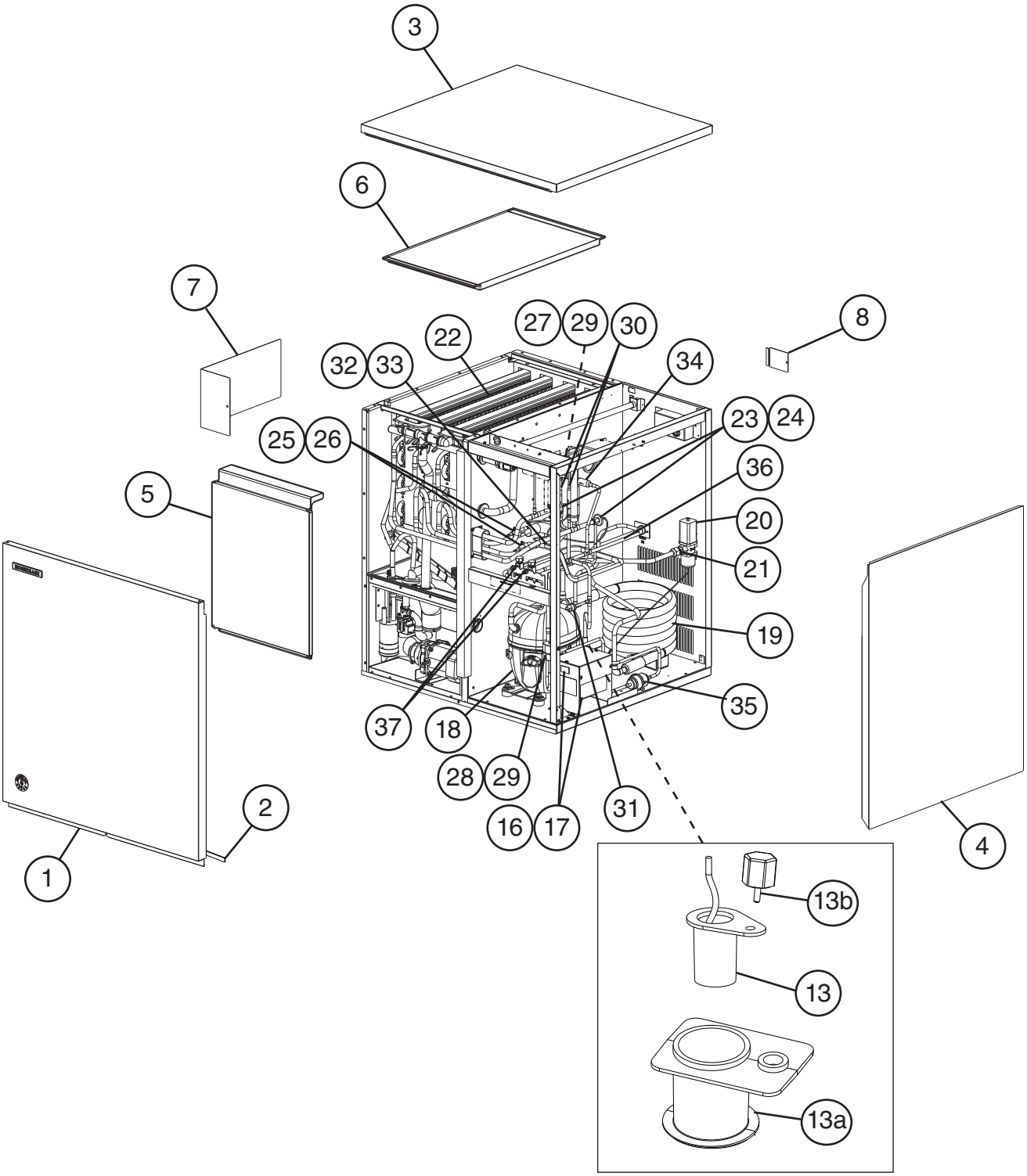

Title: A. Main Assembly & Refrigeration Circuit Model: KM-901MWJ												
				Required Number								
Index No.	Description	Material or Model Number	Part Number	G-0 to L-2	L-3 to P-0	P-3 to Q-2						
Main Assembly												
1	Front Panel Assembly (includes items 1 and 2 from "D.Accessories and Labels,")		1A6376A01	1	1	-						
			1A7686A01			1						
2	Gasket	L=762 mm	4A0808L02	1	1	1						
3	Top Panel Assembly		3A1941A01	1	1	1						
4	Right Side Panel		1A3617G01	1	1	1						
5	Front Insulation		3A8392G01	1	1	1						
6	Top Insulation		322714G01	1	1	1						
7	Control Box Cover		3A9007-01	1	-							
			3B1113-01		1	1						
8	Junction Box Cover		433410-01	1	2	2						
9	Thermostatic Bulb Holder Bracket		322815G02	1	-							
10	Thermostatic Bulb Holder		3A3903-01	1	-							
10a	Thumbscrew		415949G10	2	-							
11	Thermostatic Capillary Tube Bushing		425307-02	1	-							
12	Silicone Hose	L=285 mm	7730I3812	1	-							
13	Mechanical Bin Control		2A8598G02		1	-						
	Ultrasonic Bin Control		4A6148G01			1						
13a	Ultrasonic Sensor Housing		4A7597-01			1						
13b	Thumbscrew		415949G10		2	1						
14	Mechanical Bin Control Bracket		3A6040-01		1	-						
14a	Thumbscrews		415949G10		2	-						
15	Mechanical Bin Control Extension Bracket		4A7068G01		1	-						
16	Main Transformer		4A5695-01	1	1	1						
17	Voltage Tap Switch		4A1477-01	1	1	1						
Refrigeration Circuit												
18	Compressor		3A6900-01	1	1	1						
19	Water-Cooled Condenser		3A7323-01	1	1	1						
20	Water Regulating Valve		4A0911-07	1	1	1						
21	Male Connector		4A1087-01	1	1	1						
22	Evaporator		1A3820G01	1	1	1						
23	Thermostatic Expansion Valve		4A4008-02	2	2	2						
24	Thermostatic Expansion Valve Cover		3A0944-01	2	2	2						
25	Thermostatic Expansion Valve Bulb Holder		3A0107-01	2	2	2						
26	Clamp		443461-02	2	2	2						
27	Hot Gas Valve Body		4A3978-01	1	1	1						
28	Liquid Line Valve Body		4A3276-01	1	1	1						
29	Valve Coil		4A3277-01	2	2	2						
30	Check Valve		4A1373-01	2	2	2						

Title: A. Main Assembly & Refrigeration Circuit Model: KM-901MWJ												
				Required Number								
Index No.	Description	Material or Model Number	Part Number	G-0 to L-2	L-3 to P-0	P-3 to Q-2						
31	High-Pressure Switch		463180-05	1	1	1						
32	Thermistor	**SP-5672**	429006-03	1	1	1						
33	Thermistor Holder		427430-01	1	1	1						
34	Strainer		441569-04	1	1	1						
35	Drier		4A1113-01	1	1	1						
36	Heat Exchanger		1A7669G01	1	1	1						
37	Service Valve		4A3420-01	2	2	2						

A. Main Assembly & Refrigeration Circuit
KM-901MRJ(Z)/3
1/2

G-0 to L-4, L-0(L) to P-2

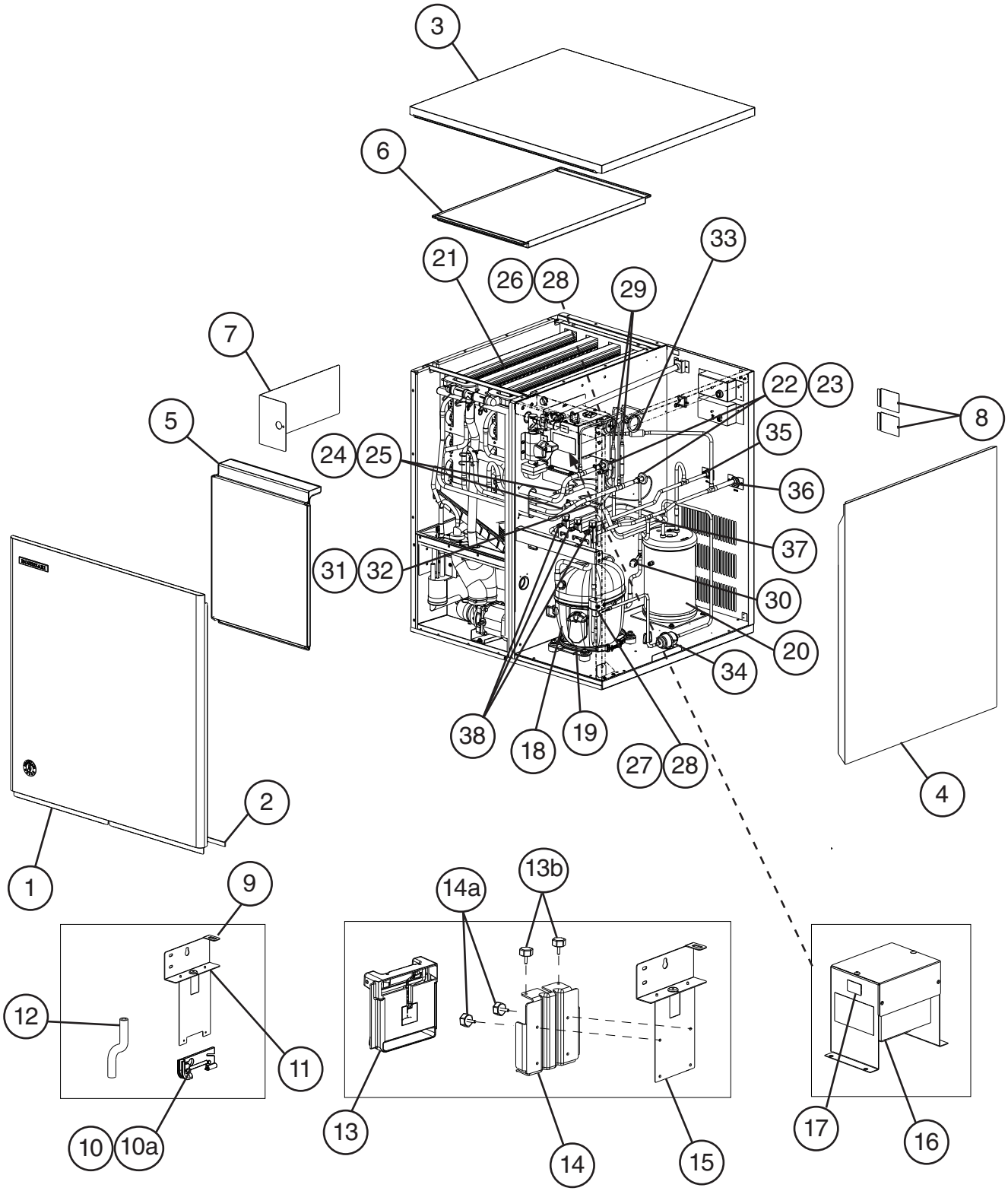

For Bin Control Thermostat, see "C. Control Box Assembly"

A. Main Assembly & Refrigeration Circuit
KM-901MRJZ/3
2/2

P-3 to R-1

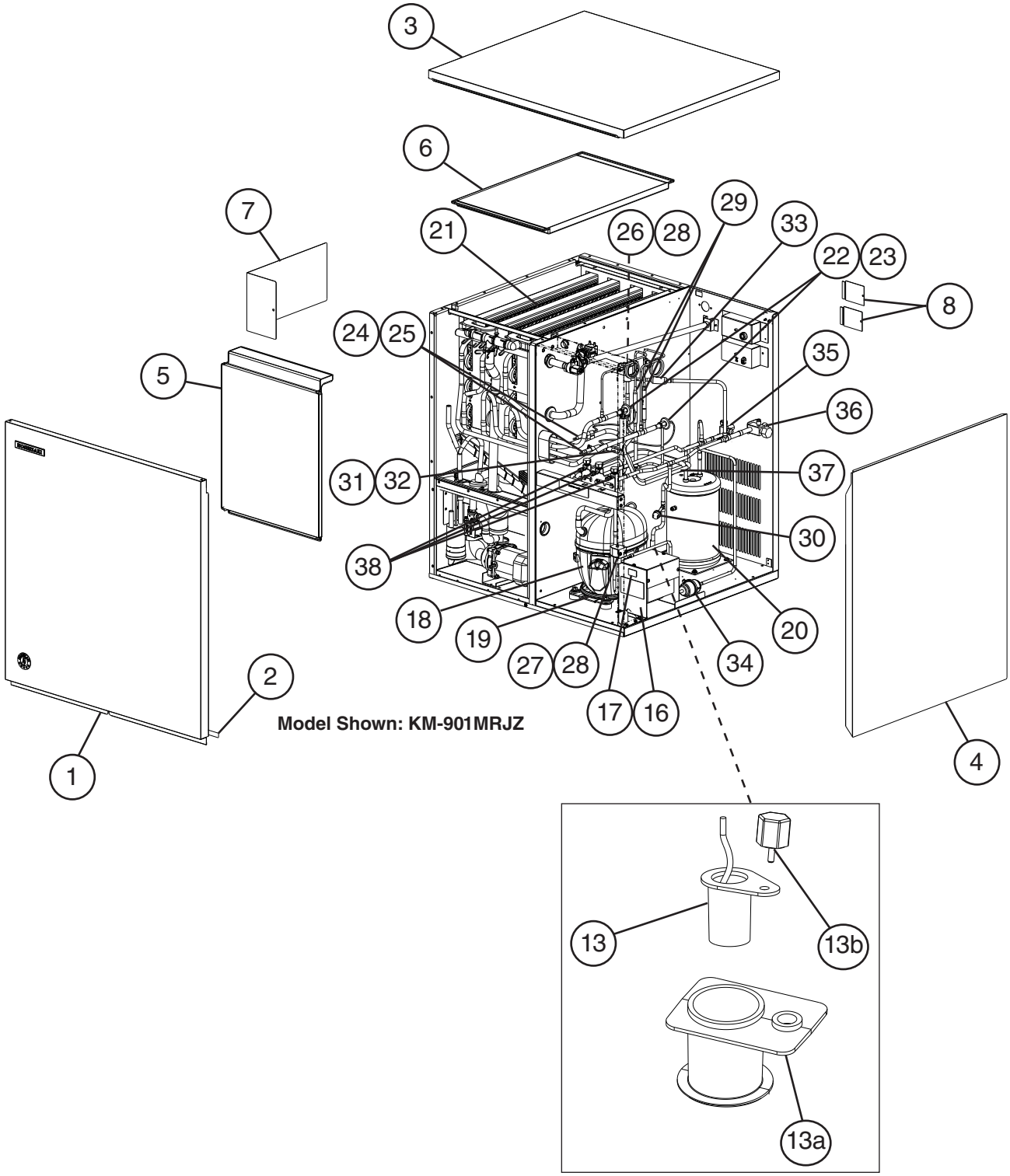

Title: A. Main Assembly & Refrigeration Circuit Model: KM-901MRJ(Z)/3												
				Required Number								
Index No.	Description	Material or Model Number	Part Number	G-0 to L-4 (K)	L-0 (L)	M-0 to P-2	P-3 to Q-0	Q-1 to R-1				
Main Assembly												
1	Front Panel Assembly (includes items 1 and 2 from "D.Accessories and Labels,")		1A6376A01	1	1	1	-					
			1A7686A01				1	1				
2	Gasket	L=762 mm	4A0808L02	1	1	1	1	1				
3	Top Panel Assembly		3A1941A01	1	1	1	1	1				
4	Right Side Panel		1A3617G01	1	1	1	1	1				
5	Front Insulation		3A8392G01	1	1	1	1	1				
6	Top Insulation		322714G01	1	1	1	1	1				
7	Control Box Cover		3B1113-01	1	1	1	1	-				
			3B1942-01				1	1				
8	Junction Box Cover		433410-01	2	2	2	2	2				
9	Thermostatic Bulb Holder Bracket		322815G02	1	1	-						
10	Thermostatic Bulb Holder		3A3903-01	1	1	-						
10a	Thumbscrew		415949G10	2	2	-						
11	Thermostatic Capillary Tube Bushing		425307-02	1	1	-						
12	Silicone Hose	L=285 mm	7730I3812	1	1	-						
13	Mechanical Bin Control		2A8598G02			1	-					
	Ultrasonic Bin Control		4A6148G01				1	1				
13a	Ultrasonic Sensor Housing		4A7597-02					1				
13b	Thumbscrew		415949G10			2	1	1				
14	Mechanical Bin Control Bracket		3A6040-01			1	-					
14a	Thumbscrew		415949G10			2	-					
15	Mechanical Bin Control Extension Bracket		4A7068G01			1	-					
16	Main Transformer	**KM-901MRJ(Z)**	4A5695-01	1	1	1	-					
		KM-901MRJ(Z)3	4A0817-01	1	1	1	1	-				
			4A5695-01					1				
17	Voltage Tap Switch		4A1477-01	1	1	1	1	1				
Refrigeration Circuit												
18	Compressor	**KM-901MRJ(Z)**	3A6900-01	1	1	1	1	1				
		KM-901MRJ(Z)3	3A9473-01	1	1	1	1	1				
19	Crankcase Heater		4A5091-01	1	1	1	1	1				
20	Receiver Tank		4A6213-01	1	1	1	1	1				
21	Evaporator		1A3820G01	1	1	1	1	1				
22	Thermostatic Expansion Valve		4A4008-02	2	2	2	2	2				
23	Thermostatic Expansion Valve Cover		3A0944-01	2	2	2	2	2				
24	Thermostatic Expansion Valve Bulb Holder		3A0107-01	2	2	2	2	2				
25	Clamp		443461-02	2	2	2	2	2				
26	Hot Gas Valve Body		4A3978-01	1	1	1	1	1				
27	Liquid Line Valve Body		4A3276-01	1	1	1	1	1				
28	Valve Coil		4A3277-01	2	2	2	2	2				
29	Check Valve		4A1373-01	2	2	2	2	2				

Title: A. Main Assembly & Refrigeration Circuit Model: KM-901MRJ(Z)/3												
				Required Number								
Index No.	Description	Material or Model Number	Part Number	G-0 to L-4 (K)	L-0 (L)	M-0 to P-2	P-3 to Q-0	Q-1 to R-1				
30	High-Pressure Switch		463180-04	1	1	1	1	1				
31	Thermistor	**SP-5672**	429006-03	1	1	1	1	1				
32	Thermistor Holder		427430-01	1	1	1	1	1				
33	Strainer		441569-04	1	1	1	1	1				
34	Drier		4A1113-01	1	1	1	1	1				
35	Liquid Line Coupling	**KM-901MRJ/3**	4A3887-01	1	-							
	Liquid Line Shutoff Valve	**KM-901MRJZ/3**	4A3491-01		1	1	1	1				
36	Discharge Line Coupling	**KM-901MRJ/3**	434136-01	1	-							
	Discharge Line Shutoff Valve	**KM-901MRJZ/3**	4A4822-01		1	1	1	1				
37	Heat Exchanger	**KM-901MRJZ/3**	1A7669G01					1				
38	Service Valves		4A3420-01	3	3	3	3	3				

B. Water Circuit
KM-901M_J(Z)/3 1/2

G-0 to P-2

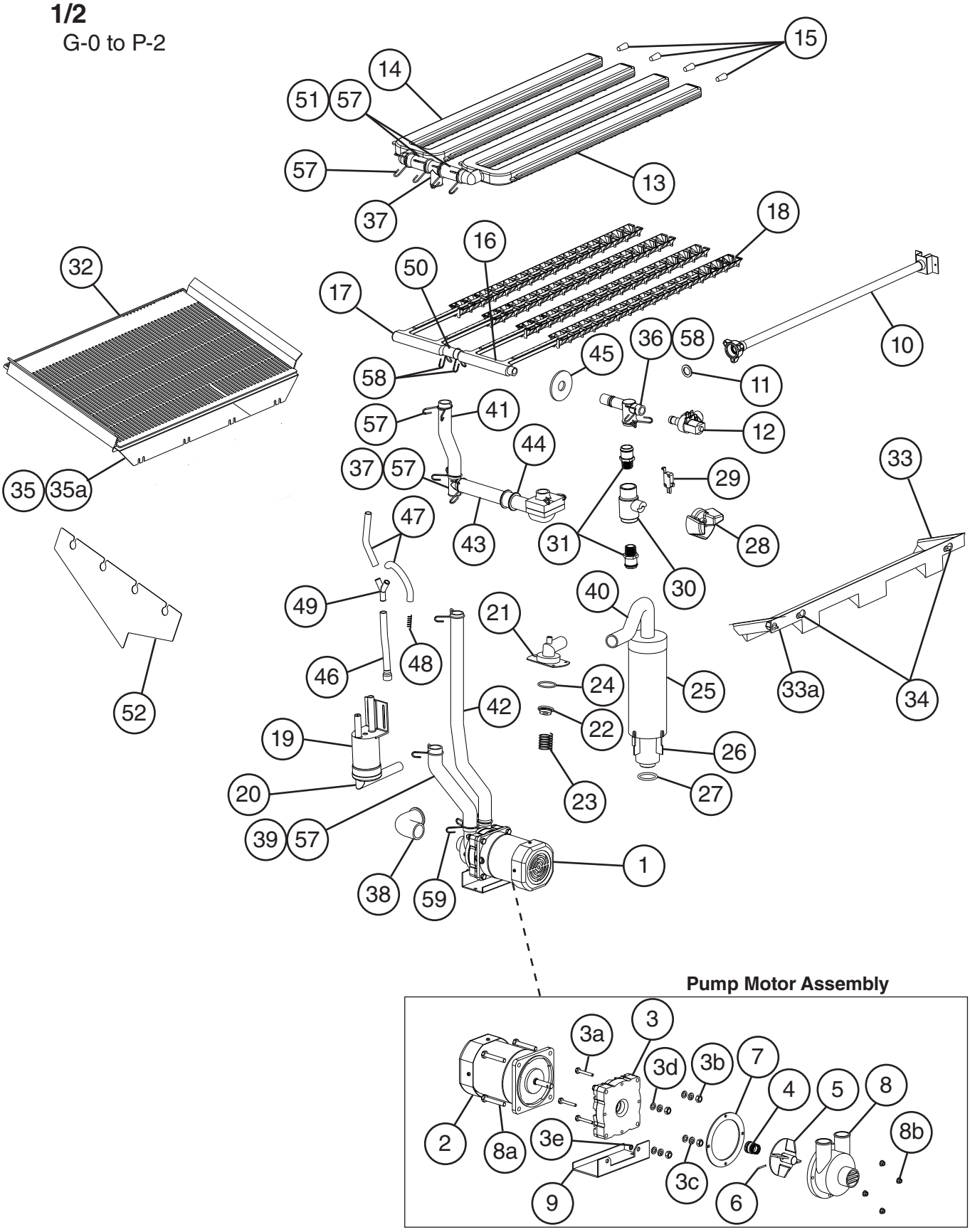

B. Water Circuit
KM-901M_J(Z)/3
2/2

P-3 to R-1

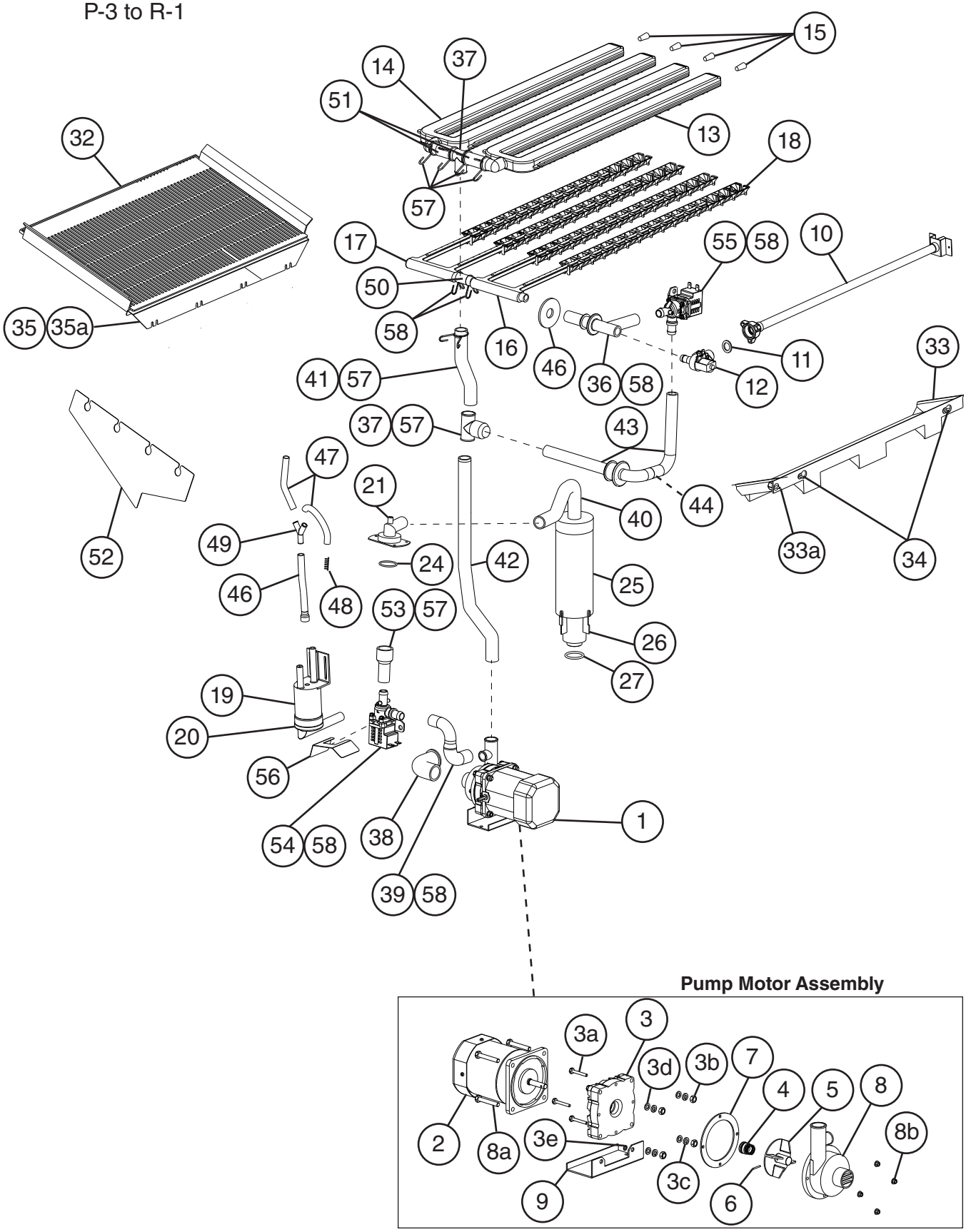

Title: B. Water Circuit Model: KM-901M_J(Z)/3												
				Required Number								
Index No.	Description	Material or Model Number	Part Number	G-0	G-1 to L-0	L-1	L-2 to P-0	P-2	P-3 to Q-0	Q-1 to R-1		
1	Pump Motor Assembly (Includes items 2 through 9)	**SP-0731**	215693A01	1	1	1	1	1	-			
			2B0399A01						1	1		
2	Pump Motor		3A7682-01	1	1	1	-					
			2U0106-01				1	1	1	-		
			4A7462-01							1		
3	Pump Flange		215662-01	1	1	1	1	1	1	1		
3a	Hex Bolt	4x30	7B02-0430	4	4	4	4	4	4	4		
3b	Hex Nut		7N12-0600	4	4	4	4	4	4	4		
3c	Split Lock Washer		7L22-0600	4	4	4	4	4	4	4		
3d	Flat Washer		7W22-0600	4	4	4	4	4	4	4		
3e	Tooth Washer		7R22-0600	1	1	1	1	1	1	1		
4	Mechanical Seal		4A3820-03	1	1	1	1	1	1	1		
5	Impeller		428548-01	1	1	1	1	1	1	1		
6	Pin		4A0648-01	1	1	1	1	1	1	1		
7	Packing		428547-01	1	1	1	1	1	1	1		
8	Pump Housing		212636-01	1	1	1	1	1	-			
			2A2762-01						1	1		
8a	Hex Bolt	6x40	7B02-0640	4	4	4	4	4	4	4		
8b	Hex Flange Nut		7J02-0400	4	4	4	4	4	4	4		
9	Pump Motor Bracket		435057-01	1	1	1	1	1	1	1		
10	Water Supply Pipe		4A5216G04	1	1	1	1	1	1	1		
11	Rubber Gasket		4A7594-01	1	1	1	1	1	1	1		
12	Inlet Water Valve	**KM-901MAJ**	3U0111-01	1	1	1	1	-				
			3B1433-01					1	1	-		
			3U0111-01							1		
		KM-901MWJ KM-901MRJ(Z)/3	3U0111-02	1	1	1	1	1	1	1		
13	Right Spray Tube		1A0260-02	1	1	1	1	1	1	1		
14	Left Spray Tube		1A0260-01	1	1	1	1	1	1	1		
15	Plug		4A0176-01	4	4	4	4	4	4	4		
16	Right Water Supply Tube		2A0079-02	1	1	1	1	1	1	1		
17	Left Water Supply Tube		2A0079-01	1	1	1	1	1	1	1		
18	Spray Guide		2A4282-02	4	4	4	4	4	4	4		
19	Float Switch		4A3624-02	1	1	1	-					
			4A7077G02				1	1	1	1		
20	Float Switch Connector		426799-01	1	1	1	1	1	1	1		
21	Drain Valve Housing		3A1170-01	1	1	1	1	1	1	1		
22	Drain Valve Seat		433705-01	1	1	1	1	1	-			
23	Drain Valve Spring		322685-01	1	1	1	1	1	-			
24	O-Ring		7611-G035	1	1	1	1	1	1	1		
25	Overflow Cap		322816-01	1	1	1	1	1	1	1		
26	Overflow Pipe		322691-02	1	1	1	1	1	1	1		
27	O-Ring		4A1234-01	1	1	1	1	1	1	1		

Title: B. Water Circuit Model: KM-901M_J(Z)/3												
				Required Number								
Index No.	Description	Material or Model Number	Part Number	G-0	G-1 to L-0	L-1	L-2 to P-0	P-2	P-3 to Q-0	Q-1 to R-1		
28	Cleaning Valve Handle		215383-01	1	1	1	1	1	-			
29	Cleaning Valve Microswitch		4A2546-01	1	1	1	1	1	-			
30	Cleaning Valve Ball Valve		439293-01	1	1	1	1	1	-			
31	Cleaning Valve Male Adapter		325826-01	2	2	2	2	2	-			
32	Cube Guide (A)		214905-01	1	1	1	1	1	1	1		
33	Cube Guide (B)		322644-02	1	1	1	1	1	1	1		
33a	Thumbscrew		415949G10	1	1	1	1	-				
34	Collar		435269-01	2	2	2	2	2	2	2		
35	Plate		3A0133-01	1	1	-						
			3B0973-01			1	1	1	1	1		
35a	T2 Screw	4×10	7P32-0410	4	4	4	4	4	4	4		
36	Distributor A (Tee)		4A0177-01	1	1	1	1	1	1	1		
37	Distributor (Tee)		432426-01	2	2	2	2	2	2	2		
38	Suction Hose		435091-01	1	1	1	1	1	1	1		
39	Rubber Drain Hose A		435092-01	1	1	1	1	1	1	1		
40	Hose C		326655-01	1	1	1	1	1	1	1		
41	Vinyl Hose	L=170 mm	7716B2025	1	1	1	1	1	1	1		
42	Vinyl Hose	L=470 mm	7716B2025	1	1	1	1	1	1	1		
43	Bypass Hose		439265-01	1	1	1	1	1	-			
	3-Piece Bypass Hose Assembly (includes item 45)		3B1376G01						1	1		
44	Joint Pipe		4A6286-01					1	1	1		
45	Rubber Ring		439236-01	1	1	1	1	1	1	1		
46	Flange		439267-01	1	1	1	1	1	1	1		
47	Silicone Hose	L=140 mm	7730I3812	3	3	3	3	3	3	3		
48	Spring		435825-01	1	1	1	1	1	1	1		
49	Connector		432763-01	1	1	1	1	1	1	1		
50	Vinyl Hose	L=63 mm	7716B2025	2	2	2	2	2	2	2		
51	Vinyl Hose	L=47 mm	7716B1519	1	1	1	1	1	1	1		
52	Splash Guard		4A6118-01		1	1	1	1	1	1		
53	Drain Hose B		3B1462-01						1	1		
54	Drain Valve		4A5745-07						1	1		
55	Cleaning Valve		4A5745-06						1	1		
56	Drain Valve Terminal Cover		3B1856-02							1		
			Hose Clamps									
57	Hose Clamp	25 mm	427443-03	11	11	11	11	11	9	9		
58	Hose Clamp	18 mm	427443-05	3	3	3	3	3	6	6		
59	Hose Clamp	27 mm	427443-08	2	2	2	2	-				

C. Control Box Assembly

KM-901M_J(Z)/3

1/3

G-0 to L-4 (L)

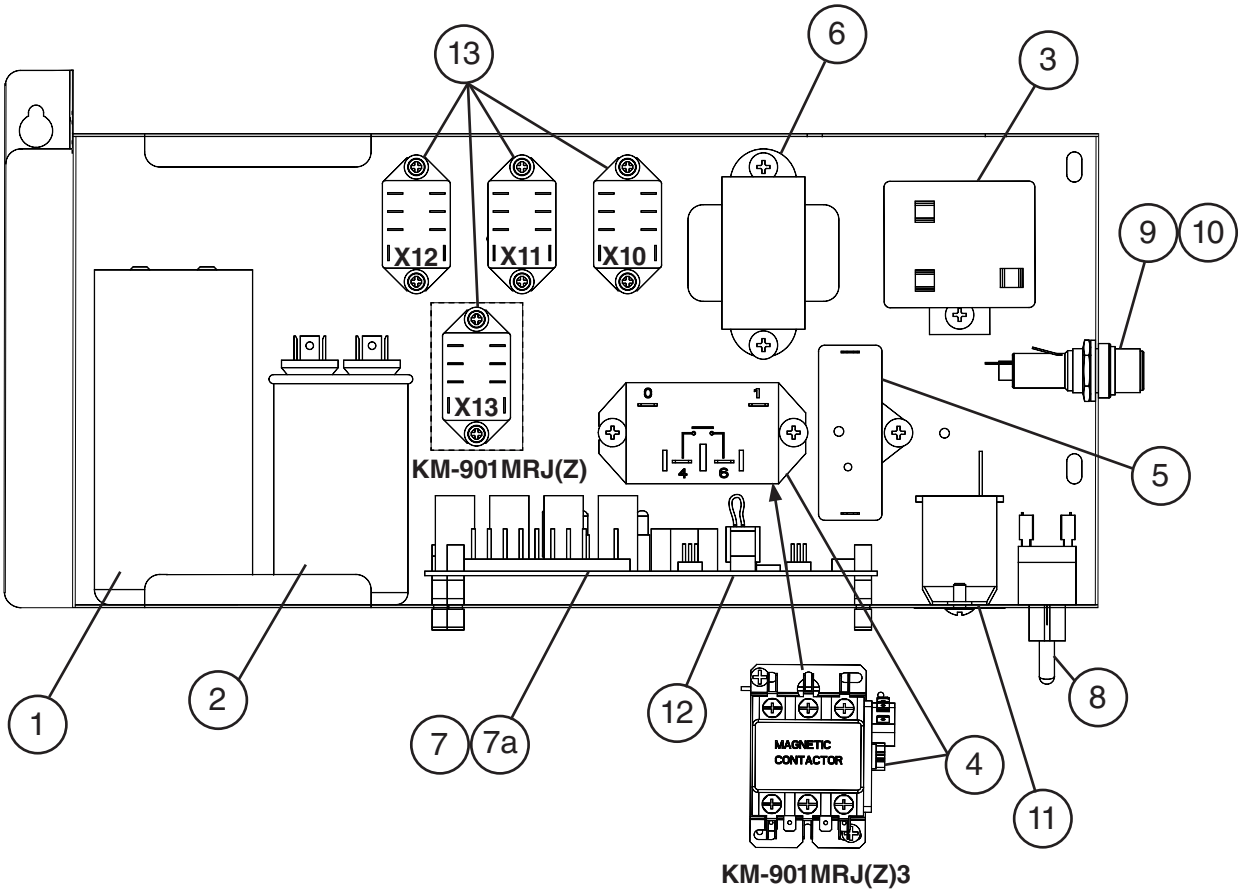

C. Control Box Assembly

KM-901M_J(Z)/3

2/3

L-4 (M) to P-2

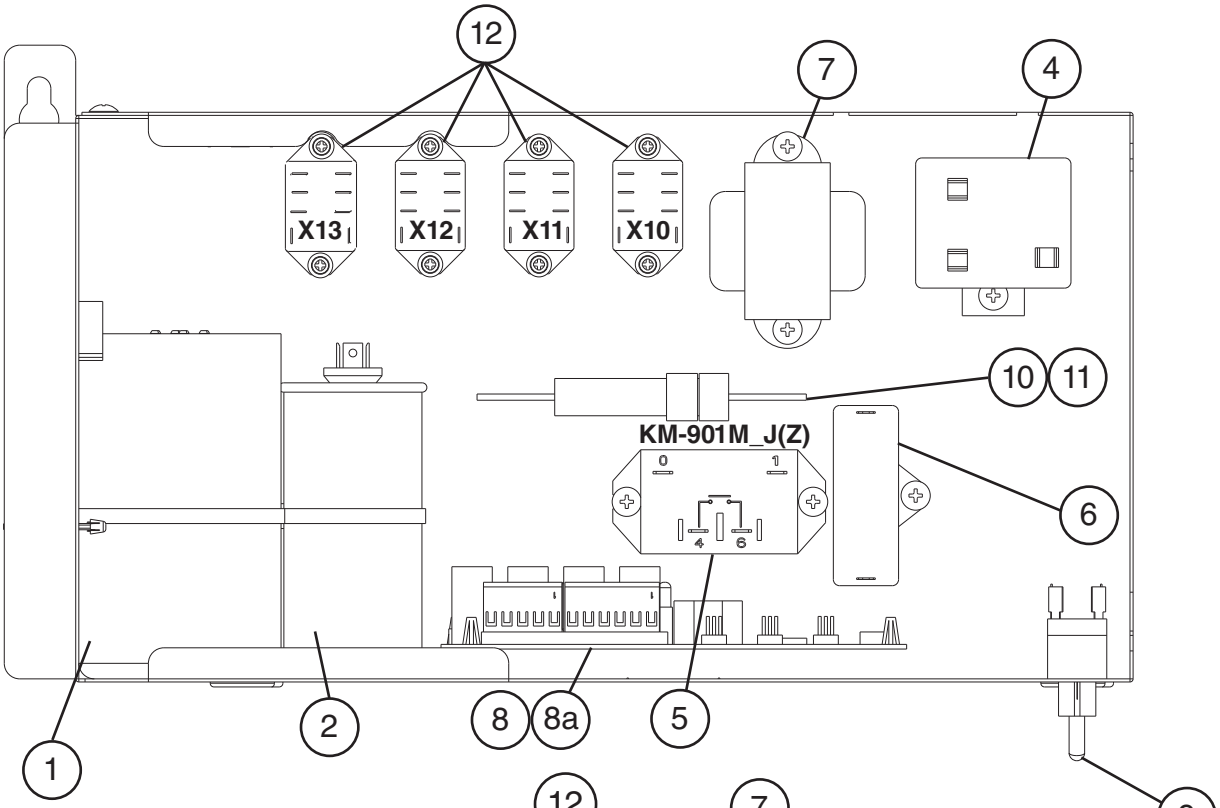

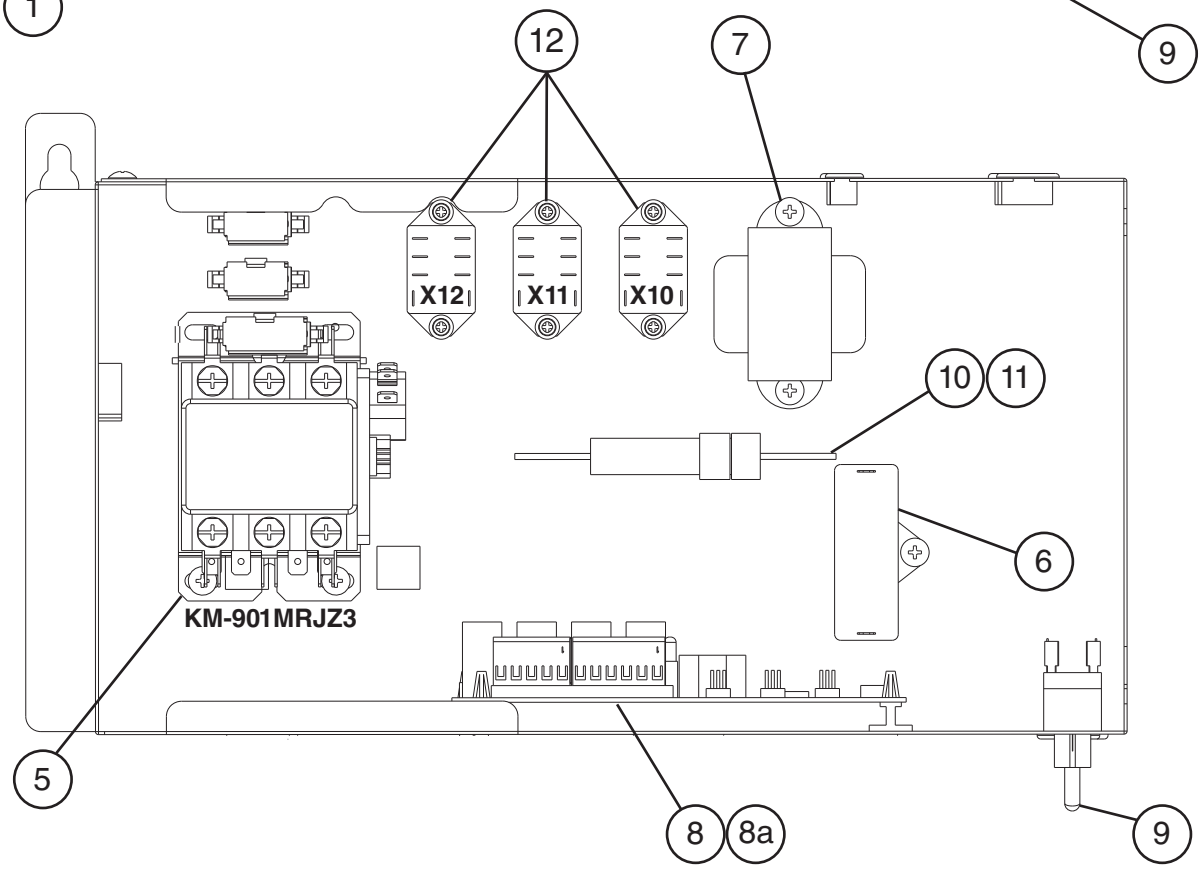

C. Control Box Assembly
KM-901M_J(Z)/3
3/3

P-3 to R-1

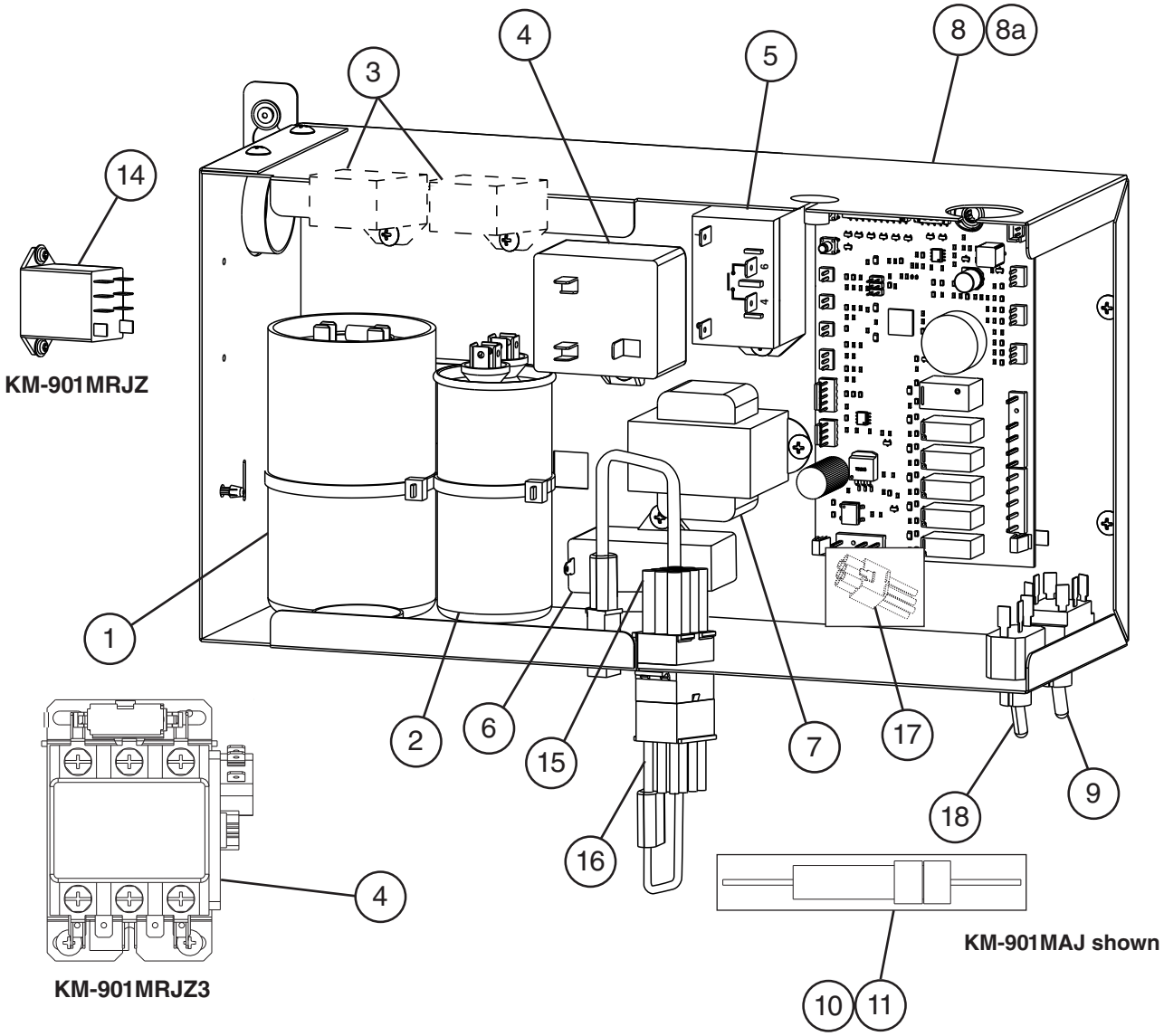

Title: C. Control Box Assembly Model: KM-901M_J(Z)/3											
				Required Number							
Index No.	Description	Material or Model Number	Part Number	G-0 to L-4 (M)	L-4 (L) to P-2	P-3 to Q-1	Q-2 to R-1				
1	Start Capacitor	**KM-901M_J(Z)**	3A0076-22	1	1	1	1				
2	Run Capacitor	**KM-901M_J(Z)**	3A2005-10	1	1	1	1				
3	Fan Motor Capacitor	**KM-901MRJ/3**	4A6435-01				1				
		KM-901MAJ	4A6435-02				2				
4	Start Relay	**KM-901M_J(Z)**	4A1107-07	1	1	1	1				
5	Compressor Relay	**KM-901M_J(Z)**	4A3140-01	1	1	1	1				
	Magnetic Contactor	**KM-901MRJ(Z)/3**	4A0794-01	1	1	1	1				
6	Pump Motor Capacitor	10MFD, 250VAC	443192-01	1	1	1	1				
	Capacitor	15MFD **KM-901M_J(Z)/3**	439705-01			1	1				
7	Control Transformer		3A0172-01	1	1	1	1				
8	Control Board		2A7664-04	1	1	-					
			2A9678-02			1	1				
8a	Control Board Support		4A0336-03	4	4	4	4				
9	Control Switch		4A6232-01	1	1	-					
	Mode Switch					1	1				
10	Fuse Holder (in-line fuse holder at L-4 (L))	**KM-901MAJ** **KM-901MWJ** **KM-901MRJ/3**	4A5443-01	1	-						
			4A6950-01		1	1	1				
		KM-901MRJZ/3			1	1	1				
11	Fuse		4A0893-07	1	1	1	1				
12	Bin Control Thermostat	**KM-901MAJ** **KM-901MWJ** **KM-901MRJ/3**	4A2879-02	1	-						
13	Jumper Connector		4A4883G01	1	-						
14	Relay (X10 - Pump Motor Relay X11 - X10 Control Relay X12 - Slush Control Relay)	**All Models**	406132-07	3	3	-					
	Relay (X13 - Crankcase Heater Relay)	**KM-901MRJ(Z)/3**		1	1	1	1				
15	Wire Harness A	**KM-901MAJ** **KM-901MWJ** **KM-901MRJZ**	1A7314-01			1	1				
		KM-901MRJZ3	1A7315-01				1				
16	Wire Harness B		1A7316-01			1	1				
17	Wire Harness C	**KM-901MRJ(Z)/3**	1A5697-01			1	1				
18	Control Switch		4A0985-01			1	1				

D. Accessories & Labels
KM-901M_J(Z)/3
G-0 to R-1

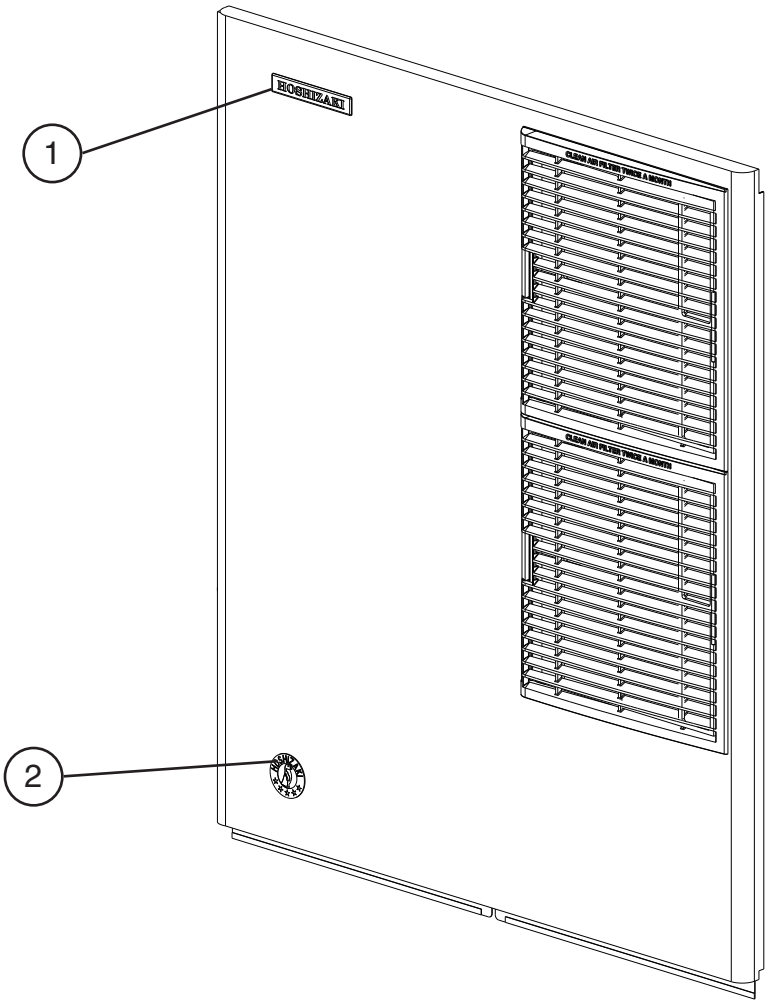

Title: D. Accessories & Labels Model: KM-901M_J(Z)/3												
				Required Number								
Index No.	Description	Material or Model Number	Part Number	G-0 to L-4	M-0 to R-1							
1	Hoshizaki Emblem Label		4A0560-01	1	1							
2	Penguin Label		475552L02	1	1							
3	Universal Brace		4A0363-01	2	2							
3a	Hex Bolt	5×12, SS	7B02-0512	2	2							
4	Thumbscrew		415949G10		2							