Manitowoc

Foodservice

Parts Manual

For more Parts Information:
https://manitowocfsg.sysonline.com/Default.aspx

TABLE OF CONTENTS

Manitowoc Foodservice [Updated: Sep. 30, 2013]
Manitowoc - Ice & Related
Parts Catalog
Ice Machine
Indigo Series
Indigo Model - QuietQube
i1870C, iCVD1895 Indigo
i1870C Head Section - Control Box Components 1
i1870C Evaporator Compartment - Common Components 3
i1870C Refrigeration Compartment - Common Components 6
i1870C Head Section - Panels 9
iCVD1895 Condensing Unit 11
iCVD1895 Condensing Unit Control Box 13
iCVD1895 Condensing Unit Panels 15

I1870C HEAD SECTION - CONTROL BOX COMPONENTS

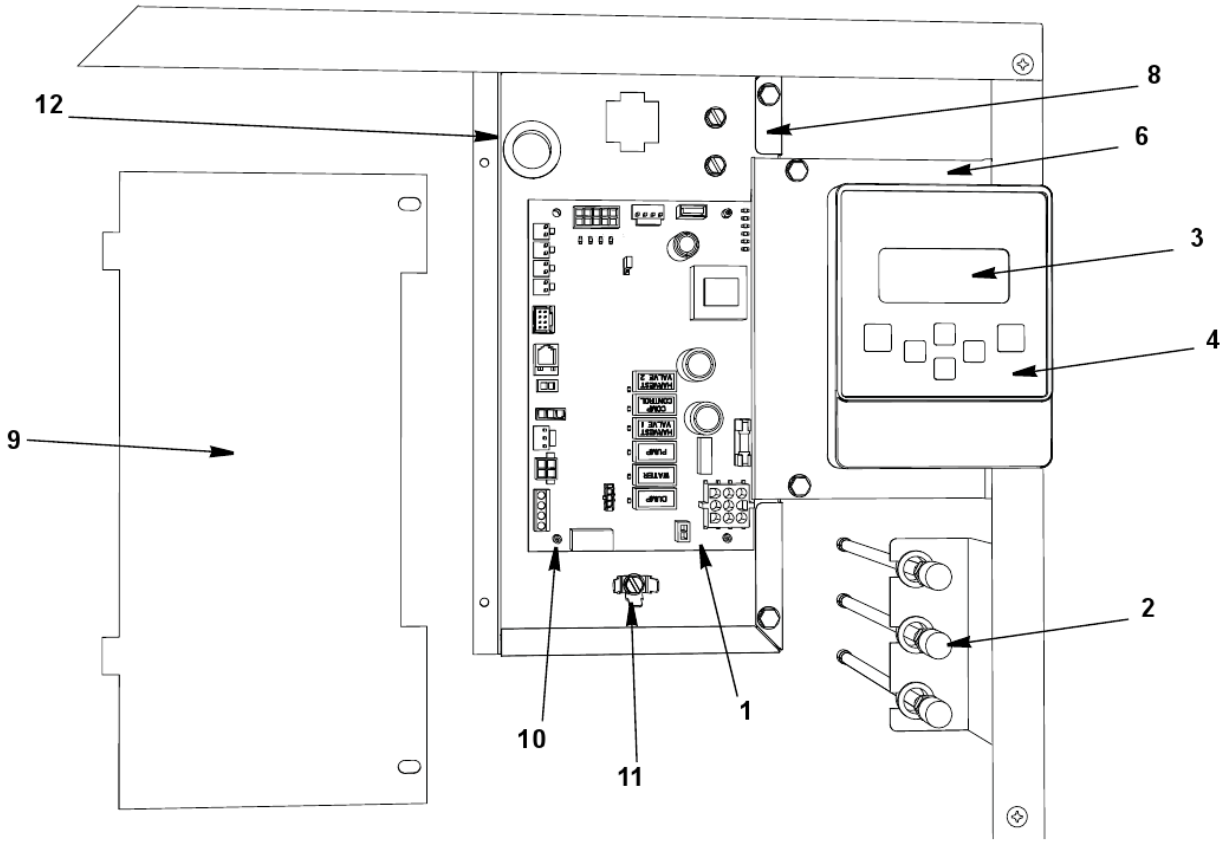

I1870C HEAD SECTION - CONTROL BOX COMPONENTS

#	PART #	DESCRIPTION	QTY	Note
1	000008309	Control Board		
1a	000009181	8 amp Ceramic Fuse - Mounted on Control Board		
2	8373263	Refrigeration Service Valve Assembly		
2a	000008049	Refrigeration Service Valve Bracket		
2b	2502183	Bushing - 0.5"		
2c	5202099	Screw - #10-24 x 0.50" PHIL		
3	000006728	LCD Display		
4	000008031	Touch Pad with Housing		
5	000007737	LCD Wiring Harness - 30" Long		
6	000007902	Touch Pad/Housing Mounting Bracket		
7		Front Panel LCD Frame		
7a	000006647	LCD Frame with Key Guard		
7b	000006564	LCD Frame without Key Guard		
7c	K00433	Display Cover		[1]
8	000007962	Control Box		
9	000009953	Control Box Cover		
10	4302253	Control Board Mounting Supports		
11	5202169	Screw - #10-24 x 0.50" Ground		
11a	5573209	Star Washer		
12	2500163	Bushing - 0.91" OD x 0.44" ID		
13		Control Box Wiring Harness		
13a	000008464	Control Box Wiring Harness - 115V/60 Hz/1 Ph		
13b	000008465	Control Box Wiring Harness - 230V/50 Hz/1 Ph		
14		Refrigeration Compartment Wiring Harness		
14a	000009033	Refrigeration Compartment Wiring Harness - 230V/50-60 Hz		

PART NOTES:

[1] - hides the display completely

I1870C EVAPORATOR COMPARTMENT - COMMON COMPONENTS

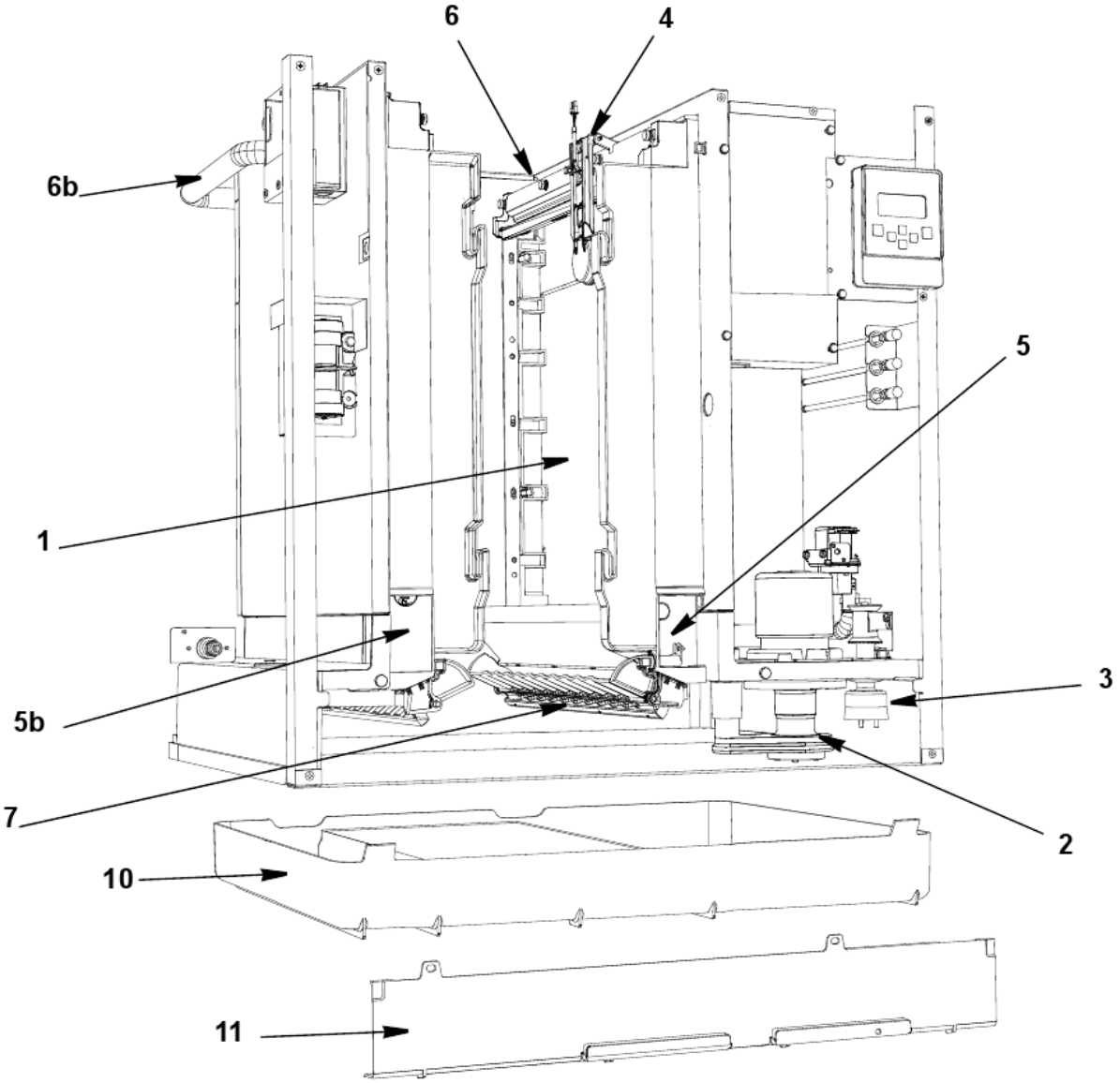

I1870C EVAPORATOR COMPARTMENT - COMMON COMPONENTS

#	PART #	DESCRIPTION	QTY	Note
1		Evaporator Assembly		
1a	000005983	Evaporator - Dice Cube		
1b	000005982	Evaporator - Half Dice Cube		
2		Water Pump		
2a	000001153	Water Pump - 115V/60 Hz		
2b	000000259	Water Pump - 230V/50 Hz		
3	000007052	Water Level Probe		
3a	000007053	Water Level Probe - Holder		
3b	000008027	Mounting Bracket Plastic		
3c	000008056	Mounting Bracket Metal		
3d	000007724	Wire - Control Box to Water Level Probe		
3e	5202099	Screw - #10-24 x 0.50" PHIL		[1]
4	000008660	Ice Thickness Control Probe		
5	000001756	Magnetic Bin Switch		
5a	000007441	Bin Switch Wiring Harness		
5b	000001421	Bin Switch Covers		
6	7602193	Water Distribution Tube - 30" Models		
6a	000001118	Molded Vinyl Tube		[2]
6b	000001117	Molded Vinyl Tube		[3]
6c	000001986	Barbed Fitting		
6d	5650609	Snap Clamp - 1.0" ID		[4]
6e	5650539	Snap Clamp - 1.123 x 1.296		[5]
6f	4014693	Fitting		[6]
6g	000002465	Fitting Bracket		
7	000002056	Ice Damper Assembly		
8	000009176	Splash Shields		
9	000009118	Front Splash Shield		
10	000001097	Water Trough		
11	000002190	Front Panel Mount		
12	000002176	Evaporator Top Filler Covers		
13	000002307	Evaporator Right/Left Filler Panels		
14	000002786	Evaporator Top Frame Assembly		
15	000001416	Evaporator Bottom Covers		
16	000001143	Evaporator Bottom Frame		
17	5004799	Thumbscrew SS - #8-32 x 0.375"		[7]
17a	5004629	O-Ring - 0.125" ID		
18	5012319	Screw - #12-16 x 0.75"		
19	000008028	Water Pump Mount		
20	5004659	Water Pump Base O-Ring - 4.00" ID		
21	5004679	Water Pump Outlet O-Ring - 0.875" ID		
22	5202069	Screw - #10-24 x 0.50" HEX		[8]
23	000002476	Washer		[8]

I1870C EVAPORATOR COMPARTMENT - COMMON COMPONENTS

#	PART #	DESCRIPTION	QTY	Note

PART NOTES:

[1] - to mount water level probe holder
[2] - to Right Hand Distribution Tube
[3] - to Left Hand Distribution Tube
[4] - for barbed fitting
[5] - vinyl tubes to distribution tubes
[6] - through bulkhead
[7] - Water Distribution Tube Mounting
[8] - water pump to pump mount

I1870C REFRIGERATION COMPARTMENT - COMMON COMPONENTS

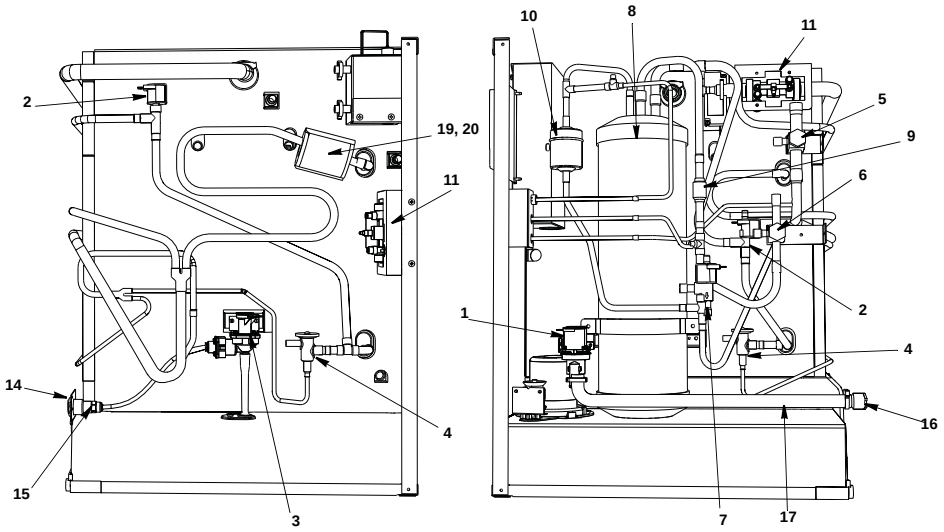

I1870C REFRIGERATION COMPARTMENT - COMMON COMPONENTS

#	PART #	DESCRIPTION	QTY	Note
1		Water Dump Valve		
1a	000001767	Water Dump Valve - 115V/60 Hz		
1b	000001768	Water Dump Valve - 208-230V/50-60 Hz		
1c	000001911	Dump Valve Mounting Bracket		
2		Harvest Valve		
2a	000007016	Solenoid Valve Including 115V/60 Hz Electrical Coil		
2b	000005156	Danfoss Solenoid Valve Coil Only - 115V/60 Hz		[1]
2c	000007015	Solenoid Valve With Electrical Coil 208-230V/50-60 Hz		
2d	000005157	Danfoss Solenoid Valve Coil Only - 230V/50-60 Hz		[2]
3		Water Inlet Valve		
3a	000007965	Water Inlet Valve - 115V/60 Hz/1 Ph		
3b	000007966	Water Inlet Valve - 208-230V/50-60 Hz		
3c	000008185	Water Inlet Valve Bracket		
4	7601593	Expansion Valve		
4a	4000403	Valve Insulation Boot - Body		
4b	4000923	Valve Insulation Boot - Bulb		
5	8373283	Manual Shut-off Valve Suction Line		
5a	6036261	Bracket - 3/4" Valve		
6	8373273	Manual Shut-off Valve Liquid Line		
6a	6036721	Bracket - 1/2" Valve		
7		Liquid Line Solenoid Valve		
7a	000007027	Solenoid Valve with Electrical Coil - 115V/60 Hz		
7b	000005156	Danfoss Solenoid Valve Coil Only - 115V/60 Hz		[1]
7c	000007026	Solenoid Valve with Electrical Coil - 208-230V/50 Hz		
7d	000005157	Danfoss Solenoid Valve Coil Only - 230V/50-60 Hz		[2]
8	7629603	Receiver		
8a	000001779	Bracket - Receiver		[3]
8b	000001780	Bracket - Receiver		[4]
8c	6307214	Receiver Mounting Strap		
9	8373159	Magni-Check Valve - 0.5"		
10	8930279	Drier		
11		Air Pumps		
11a	000007222	Air Assist - 115V/60 Hz		
11b	000007223	Air Assist - 230V/50-60 Hz		
11c	4011739	Air Manifold		[5]
11d	000006489	Air Assist Bracket		
12	K00434	LuminIce		
12a	K00425	LuminIce Bulb		
12b	000008283	LuminIce Wiring Harness		
12c	000007990	Bulkhead Fitting 2.25"		
12d	000008269	Bulkhead Fitting 2.75"		
13	000008310	Thermistor with Spring Clips		

I1870C REFRIGERATION COMPARTMENT - COMMON COMPONENTS

#	PART #	DESCRIPTION	QTY	Note
14	8706093	Female Wing Adapter - 0.375"		
15	1360961	Male Connector		
16	8706083	Female Wing Adapter - 0.50"		
17	000002340	Water Drain Tubing		
18	5650709	Snap Clamp - 0.799"/0.899" ID		
19	5650529	Clamp - Expansion Valve Bulb		
20	3000503	Strap - Expansion Valve Bulb - 0.5"		
21	5202069	Screw - #10-24 x 0.50" HEX		
22	4010439	Tubing - Water Inlet Valve		[6]
23	000002250	Mylar Shield - Water Inlet Valve		
24	4420291	Vinyl Tube - 0.25" OD		
25	4420883	Vinyl Tubing - 0.25" ID		[7]
26	5000013	Thumbscrew - #8-32 x 0.375"		
27	000002466	Screw		[8]

PART NOTES:

[1] - \pages from 000005156_02.jpg" width=280 height=256>
[2] - \pages from 000005156_02.jpg" width=266 height=183>
[3] - bottom
[4] - top
[5] - air pump tubing outlet
[6] - molded
\pages from 401043_05.jpg" width=1797 height=2238>
[7] - 0.25 ID
[8] - Slot Hex

I1870C HEAD SECTION - PANELS

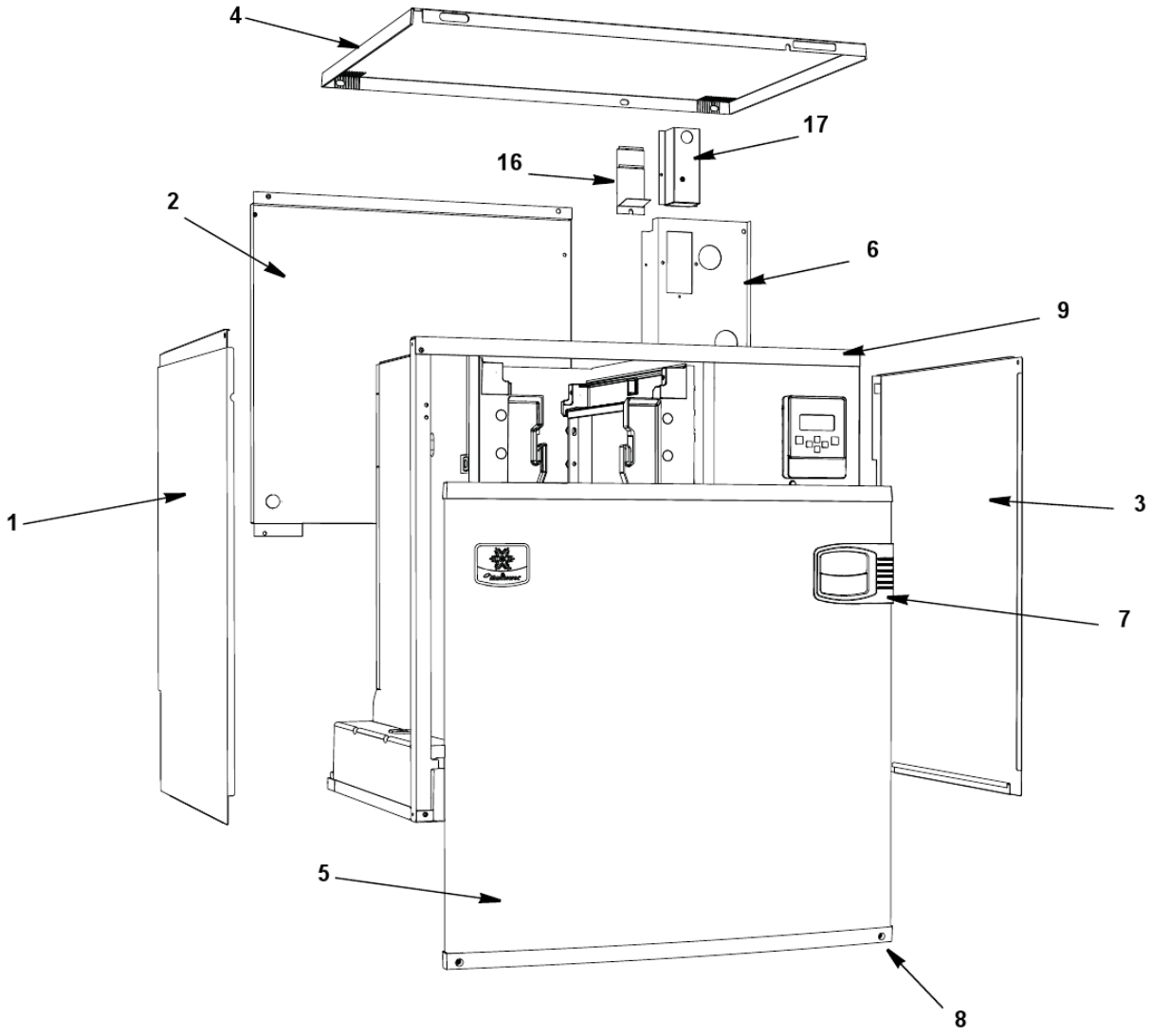

I1870C HEAD SECTION - PANELS

#	PART #	DESCRIPTION	QTY	Note
1	000008144	Left Side Panel		
2	000008146	Back Panel		
3	000008145	Right Side Panel		
4	000006699	Top Cover		
5	000007602	Front Door		
5a	000007599	Top Endcap		
5b	000007600	Bottom Endcap		
6	000008147	Coupling Panel		
7		Front Panel LCD Frame		
7a	000006647	LCD Frame with Key Guard		
7b	000006564	LCD Frame without Key Guard		
7c	K00433	Display Cover		[1]
8	000008023	Front Panel Screw		
9	000007961	Top Front Rail		
9a	5202099	Screw - #10-24 x 0.50" PHIL		
9b	000002246	Plastic Dome Head Plug		
10	000007900	Front Panel Mounting Bracket		
10a	5026739	Mounting Screw 8-32 x 0.50 Phil		
11	000007838	Bottom Front Rail		
11a	5005099	Mounting Screw - #10-16 x 0.625" PHIL		
12		Front Posts		
12a	000008252	Front Post - Left		
12b	000008156	Front Post - Right		
13	5000373	Screw - #10-24 x 0.50" PHIL		
14	000002288	Spacer, Top Cover		
15	2006143	Terminal Block - 50 Hz - 3 Pole		
16		Electrical Connection Box Cover		
16a	000002230	Control Box		
16b	000002317	Electrical Connection Box Cover		
16c	5202069	Screw - #10-24 x 0.50" HEX		
17		Electrical Connection Box		
17a	6063989	Electrical Connection Box Cover		
17b	000002316	Control Box		
18	7112429	Cartoning		

PART NOTES:

[1] - hides the display completely

ICVD1895 CONDENSING UNIT

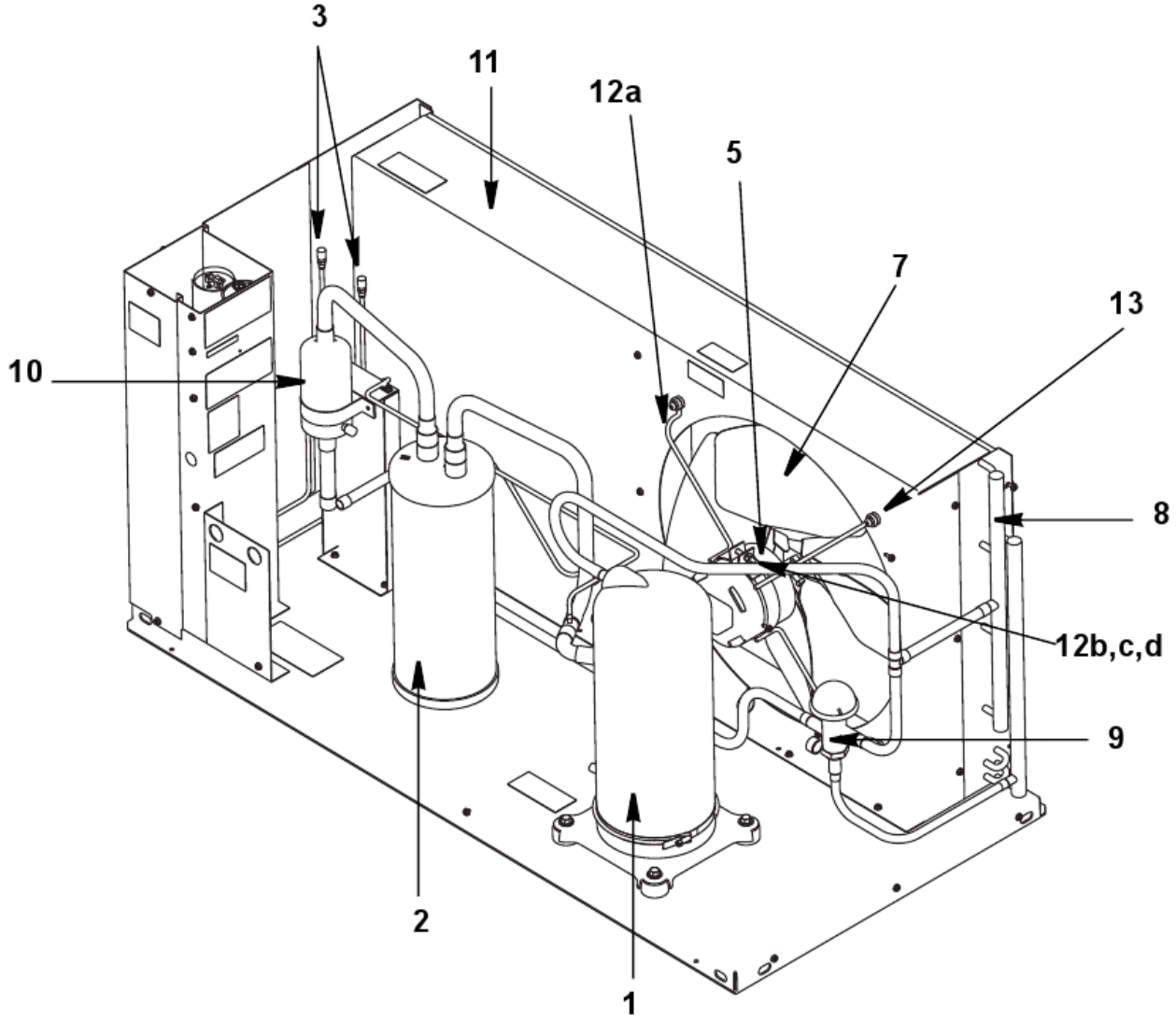

ICVD1895 CONDENSING UNIT

#	PART #	DESCRIPTION	QTY	Note
1		Compressor - Copeland		
1a	7601623	Compressor - Copeland - 208-230V/60 Hz/1 Ph		
1b	7601633	Compressor - Copeland - 208-230V/60 Hz/3 Ph		
1c	000000293	Compressor - Copeland - 220-240V/50 Hz/1 Ph		
1d	2007613	Compressor Plug		
2	000007281	Suction Accumulator		
3	8373253	Access Valve		
4	8373159	Magni-Check Valve - 0.5"		
5		Fan Motor		
5a	2000189	Fan Motor - 208-230V/60 Hz/1-3 Ph		
5b	2000589	Fan Motor - 230-415V/50 Hz/1-3 Ph		
6	2002229	Low Pressure Cut-out Control		
7	2416113	Fan Blade		
8	8851403	Air Condenser		
9	000002369	Head Pressure Control Valve		
10	8250549	Suction Line Filter		
10a	000006484	Suction Line Filter Bracket		
10b	000002210	Suction Line Filter Tie		
11	6034501	Fan Shroud		
12		Fan Motor Mounting		
12a	3006823	Fan Motor Mounting Bracket		
12b	000001524	Screw		
12c	5545119	Mounting - Lockwasher		
12d	5429529	Mounting - Hexnut		
13		Fan Bracket Mounting		
13a	000001524	Screw		
13b	5429559	Mounting - Rubber Wellnut		
14		Compressor Mounting		
14a	5035729	Mounting - Bolt		
14b	8503069	Mounting - Rubber Grommet		
14c	5573099	Mounting - Flatwasher		
14d	8503949	Mounting - Sleeve		
15	2512063	Strain Relief Bushing		

ICVD1895 CONDENSING UNIT CONTROL BOX

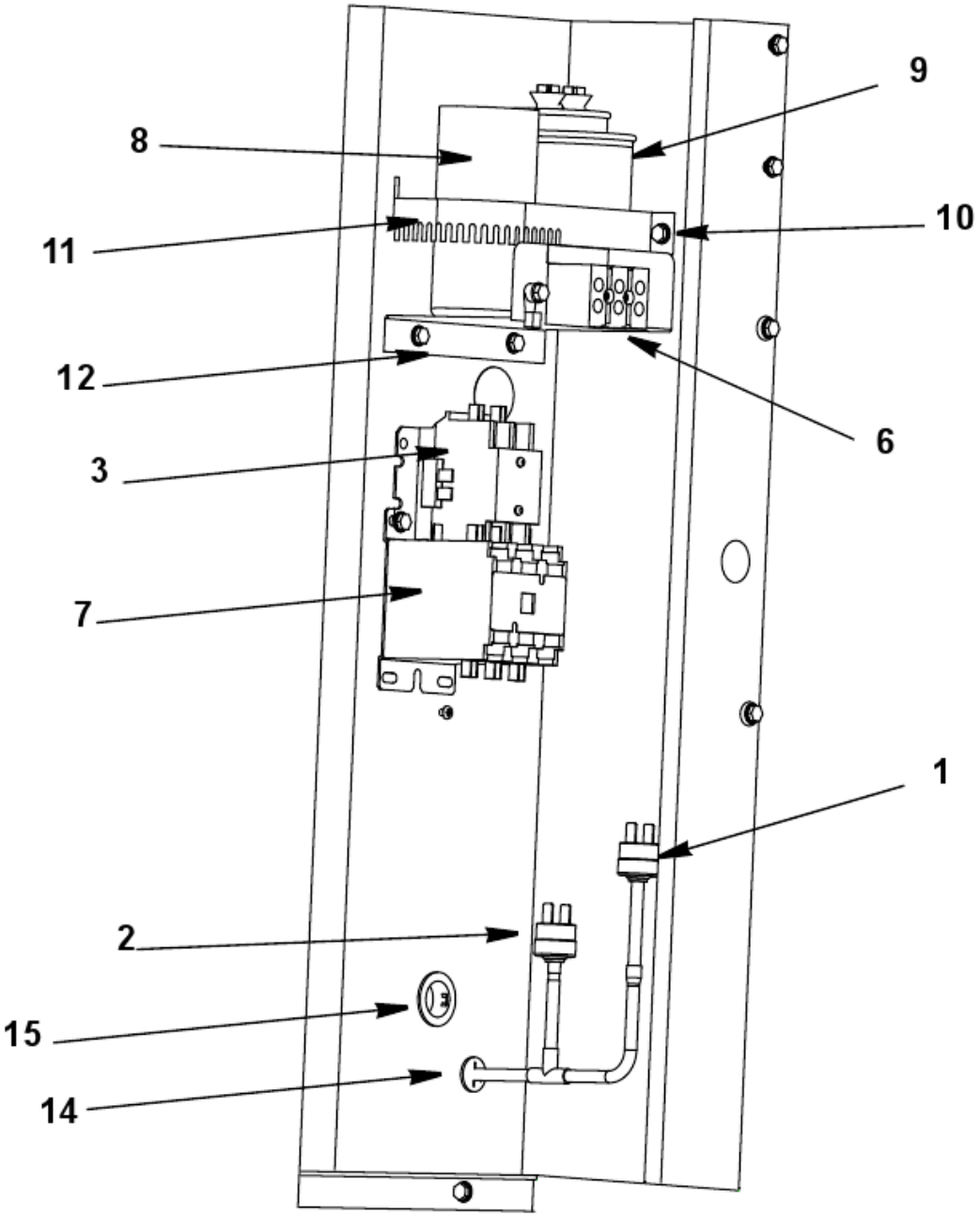

ICVD1895 CONDENSING UNIT CONTROL BOX

#	PART #	DESCRIPTION	QTY	Note
1	2001263	Fan Cycling Control - 200-250 psig		[1]
2	2001243	High Pressure Cut-out Control		
3		Contactor		
3a	000007597	Contactor - 50-60 Hz/1 Ph - 24 Volt Coil		
3b	000007598	Contactor - 60 Hz/3 Ph - 24 Volt Coil		
4	000007581	Transformer		
5		Wiring Harness		
5a	000007741	Wiring Harness - 230V/60 Hz/1 Ph		
5b	000007740	Wiring Harness - 230V/50 Hz/1 Ph		
5c	000007747	Wiring Harness - 230V/60 Hz/3 Ph		
6		Terminal Block		
6a	000009929	Terminal Block - 60 Hz with Wiring Harness		
6b	2006143	Terminal Block - 50 Hz - 3 Pole		
		Start Components		
7		Start Relay		
7a	2007559	Start Potential Relay - 50-60 Hz/1 Ph		
7b	2007523	Start Potential Relay - 50 Hz/1 Ph		
8	000006455	Start Capacitor 60 Hz/1 Ph		
8a	8505823	Start Capacitor 50 Hz/1 Ph		
9	000000028	Run Capacitor - 208-230V/50-60 Hz/1 Ph		
10	5202069	Screw - #10-24 x 0.50" HEX		
11	6021601	Capacitor Mounting Strap		
12	6034981	Capacitor Mounting Bracket		
13	5202169	Screw - #10-24 x 0.50" Ground		
14	2500169	Bushing - 0.91" OD x 0.44" ID		
15	2500029	Bushing - 1.125" OD x 0.75" ID		

PART NOTES:

[1] - \pages from 200126_09.jpg" width=150 height=306>

ICVD1895 CONDENSING UNIT PANELS

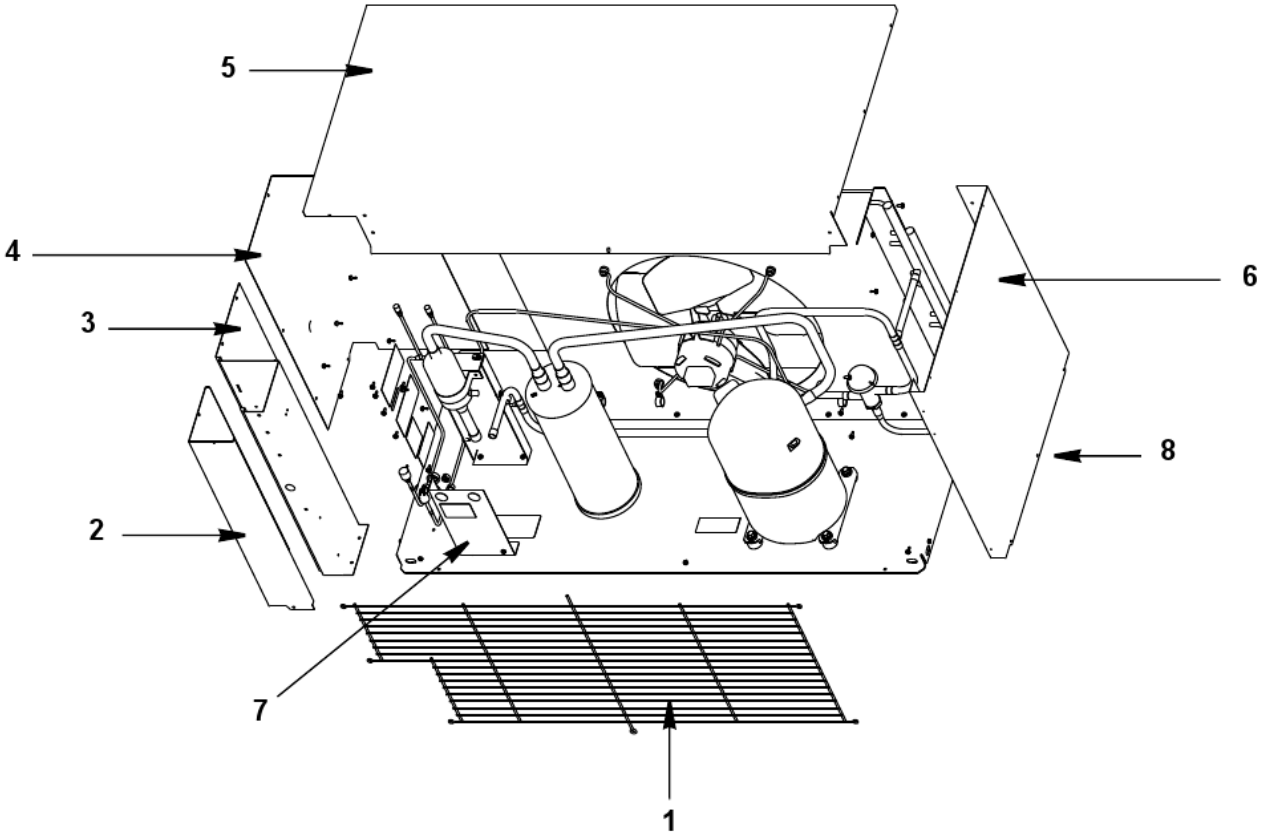

ICVD1895 CONDENSING UNIT PANELS

#	PART #	DESCRIPTION	QTY	Note
1	3406893	Condenser Fan Guard		
2	6040171	Control Box Cover		
3	000006035	Control Box Panel		
4	6037321	Left Side Panel		
5	6034751	Cover Top		
6	6034701	Right Side Panel		
7	6042261	Condensing Unit Tube Shield		
8	000006484	Suction Line Filter Bracket		
9	5202069	Screw - #10-24 x 0.50" HEX		
10	000001025	Cartoning		