Manitowoc

Foodservice

Parts Manual

For more Parts Information:
https://manitowocfsg.sysonline.com/Default.aspx

TABLE OF CONTENTS

Manitowoc Foodservice [Updated: Sep. 30, 2013]
Manitowoc - Ice & Related
Parts Catalog
Ice Machine
Indigo Series
Indigo Model - Air, Water & Remote
i1200 Indigo
i1200 Control Box 1
i1200 Evaporator Compartment - Common Components 3
i1200 Refrigeration Compartment - Common Components 6
i1200 Refrigeration Compartment – Air-cooled 9
i1200 Refrigeration Compartment – Water-cooled 11
i1200 Panels 13

i1200 Indigo

I1200 CONTROL BOX

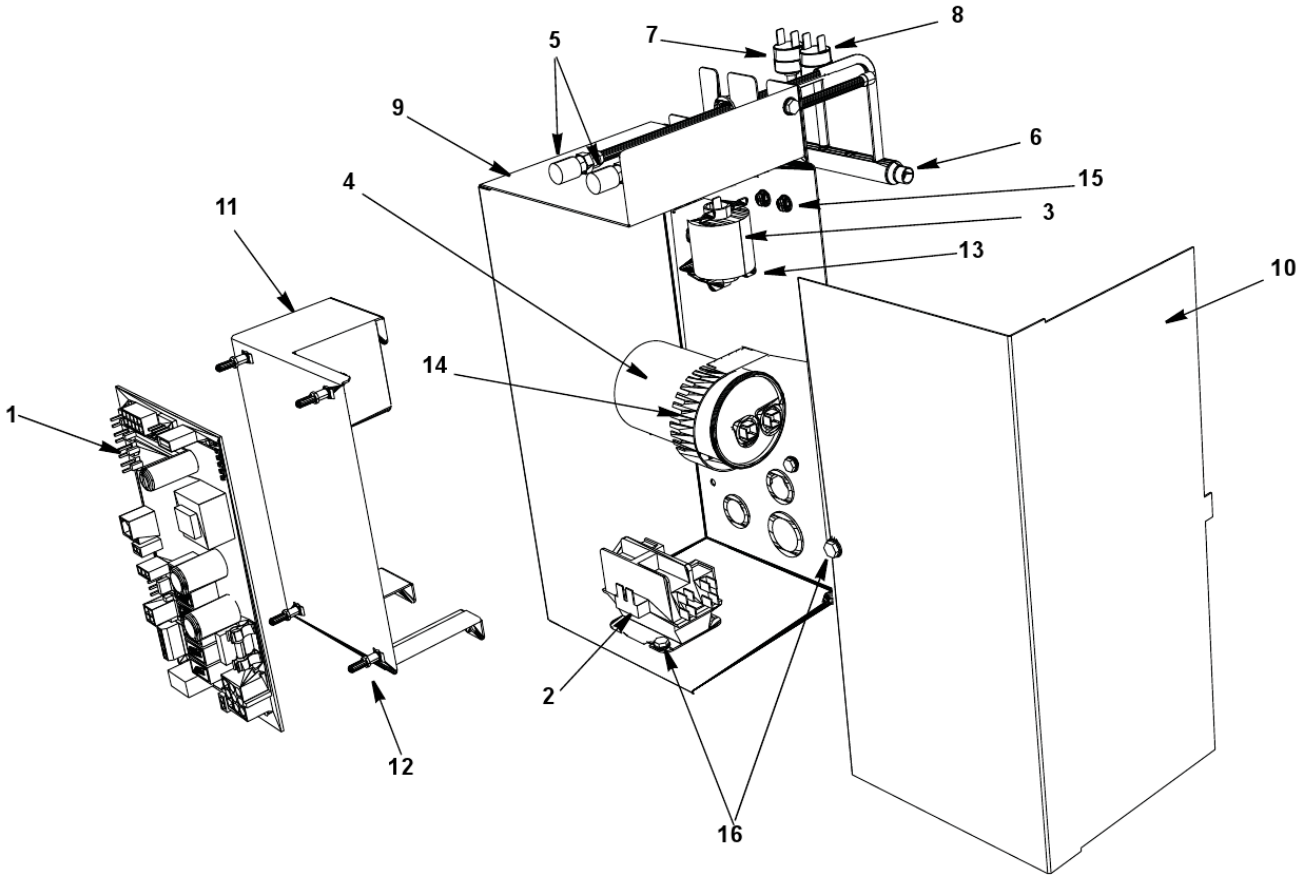

I1200 CONTROL BOX

#	PART #	DESCRIPTION	QTY	Note
1	000008309	Control Board		
1a	000009181	8 amp Ceramic Fuse - Mounted on Control Board		
2		Contactor		
2a	2009089	Contactor - 208-230V/50-60 Hz/1 Ph		
2b	2006619	Contactor - 230V/60 Hz/3 Ph		
3	8504913	PTCR		
4		Compressor Run Capacitor		
4a	2010133	Run Capacitor - 115-230V/50-60 Hz/1 Ph		
5	8373263	Refrigeration Service Valve Assembly		
6	8253579	Manifold Strainer		
6a	6058571	Bracket		
7	2001243	High Pressure Cut-out Control		
8	2001273	Fan Cycling Control - 225-275 psig		[1]
9	000008279	Control Box		
10	000010421	Control Box Cover		
11	000007564	Control Board Mounting Bracket		
12	4302253	Control Board Mounting Supports		
13	8504953	PTCR Bracket		
14	6024953	Capacitor Mounting Strap		
15	5202169	Screw - #10-24 x 0.50" Ground		
15a	5573209	Star Washer		
16	5202069	Screw - #10-24 x 0.50" HEX		
17	5573209	Star Washer		
18		Control Box Bushings		
18a	2500019	Bushing - 1.187"		
18b	2501409	Bushing - 0.875"		
19		Control Box Wiring Harness		
19a	000007752	Control Box Wiring Harness - 230V/60 Hz/1 Ph		
19b	000007181	Control Box Wiring Harness - 230V/60 Hz/3 Ph		
19c	000007753	Control Box Wiring Harness - 230V/50 Hz/1 Ph		
20		Compressor Compartment Wiring Harness		
20a	000007178	Compressor Compartment Wiring Harness - Air-cooled		
20b	000007176	Compressor Compartment Wiring Harness - Water-cooled		

PART NOTES:

[1] - \pages from 200126_09.jpg" width=170 height=228>

I1200 EVAPORATOR COMPARTMENT - COMMON COMPONENTS

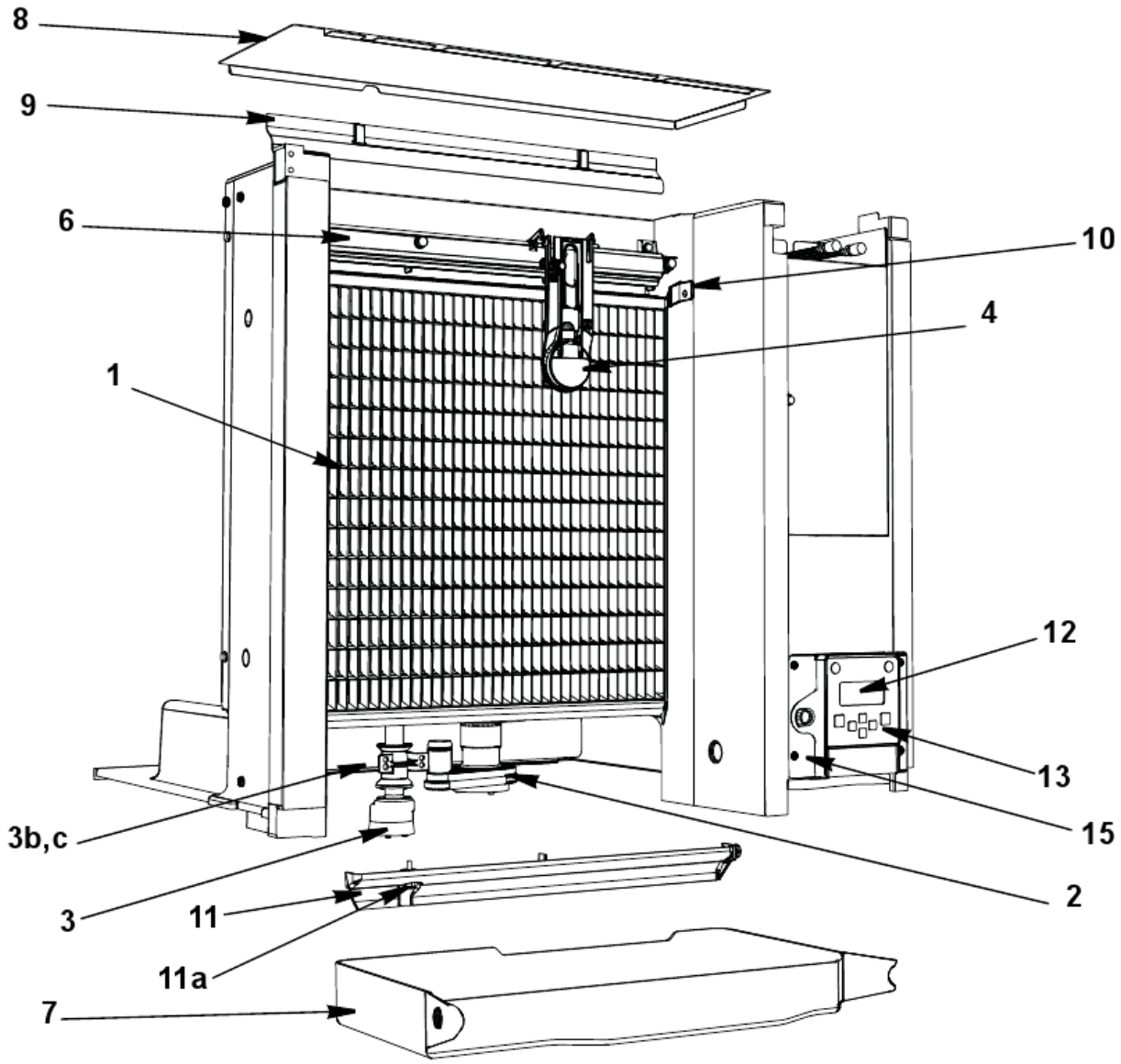

I1200 EVAPORATOR COMPARTMENT - COMMON COMPONENTS

#	PART #	DESCRIPTION	QTY	Note
1		Evaporator Assembly		
1a	7604203	Evaporator - Dice Cube		
1b	7604213	Evaporator - Half Dice Cube		
2		Water Pump		
2a	2008109	Water Pump - 230V/60 Hz		
2b	2008119	Water Pump - 230V/50-60 Hz		
2c	000010244	Water Pump Mount		
3	000007052	Water Level Probe		
3a	000007724	Wire - Control Box to Water Level Probe		
3b	000007053	Water Level Probe - Holder		
3c	5202099	Screw - #10-24 x 0.50" PHIL		[1]
4	000008660	Ice Thickness Control Probe		
5	4014489	Water Curtain		
6	7602193	Water Distribution Tube - 30" Models		
6a	5004649	O-Rings		[2]
7		Water Trough - See Note for Serial Break		
7a	4003609	Water Trough		[3]
7b	000010337	Water Trough		[4]
8	000009055	Foodzone Seal Panel		
9	3006729	Evaporator Top Filler Panel		
9a	6063339	Bracket - Top Filler Panel		
9b	5202099	Screw - #10-24 x 0.50" PHIL		
10	7602203	Evaporator Top Frame Assembly		
11	7602213	Water Diverter - 30" Models		
11a	5305123	Thumbscrew SS - #8-32 x 0.44"		
12	000006728	LCD Display		
13	000007926	Touch Pad with Housing		
14	000007737	LCD Wiring Harness - 30" Long		
15	000006697	Touch Pad/Housing Mounting Bracket		
16		Front Panel LCD Frame		
16a	000006647	LCD Frame with Key Guard		
16b	000006564	LCD Frame without Key Guard		
16c	K00433	Display Cover		[5]
17	000006700	Ice Deflector		
18	5004799	Thumbscrew SS - #8-32 x 0.375"		[6]
18a	5004629	O-Ring - 0.125" ID		
19	5004619	Screw - #12-16 x 0.687"		
20	5004659	Water Pump Base O-Ring - 4.00" ID		
21	5004679	Water Pump Outlet O-Ring - 0.875" ID		

PART NOTES:

[1] - Mount Water Level Probe Holder

I1200 EVAPORATOR COMPARTMENT - COMMON COMPONENTS

#	PART #	DESCRIPTION	QTY	Note

PART NOTES:

[2] - Back of Distribution Assembly

[3] - Before Serial Number 1101223883
\water trough.jpg" width=313 height=169>

[4] - After Serial Number 1101223883
\water trough with tabs.jpg" width=355 height=194>

[5] - hides the display completely

[6] - Water Distribution Tube Mounting Each

I1200 REFRIGERATION COMPARTMENT - COMMON COMPONENTS

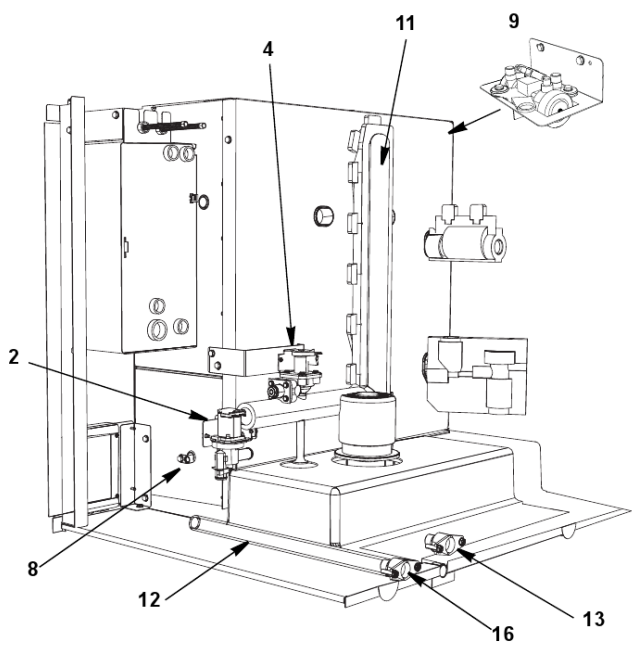

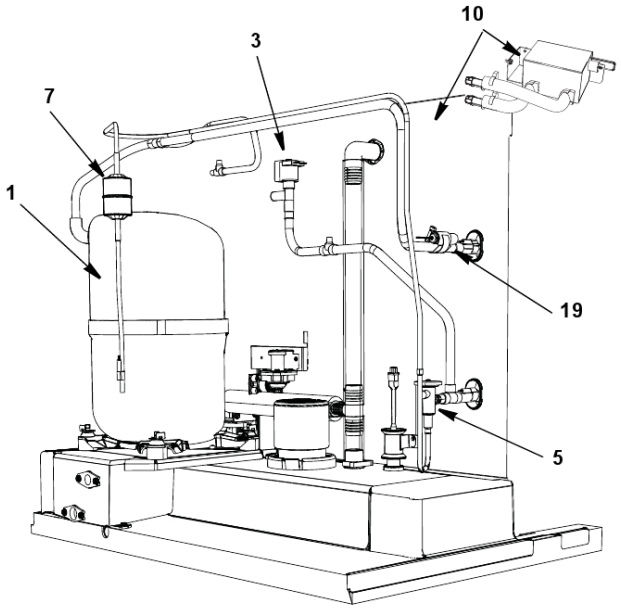

I1200 REFRIGERATION COMPARTMENT - COMMON COMPONENTS

#	PART #	DESCRIPTION	QTY	Note
1		Compressor		
1a	000008729	Compressor - Copeland - 208-230V/60 Hz/1 Ph		
1b	000008730	Compressor - Copeland - 208-230V/60 Hz/3 Ph		
1c	000008731	Compressor - Copeland - 208-230V/50 Hz/1 Ph		
1d	2006233	Molded Plug		
2		Water Dump Valve		[1]
2a	000001768	Water Dump Valve - 208-230V/50-60 Hz		
2b	6058459	Water Dump Valve Mounting Bracket		
2c	4420383	Clear Tubing - 0.625" ID		
3		Harvest Valve		
3a	7604223	Solenoid Valve with Electrical Coil - 208-230V		
3b	2009079	Electrical Coil Only - 208-230V		
4		Water Inlet Valve		
4a	000007966	Water Inlet Valve - 208-230V/50-60 Hz		
4b	000007594	Water Inlet Valve Bracket		
5	7601593	Expansion Valve		
5a	4000363	Valve Insulation Boot - Body		
5b	4007203	Valve Insulation Boot - Bulb		[2]
6	000008310	Thermistor with Spring Clips		
7	8930259	Drier		
8	000007888	Magnetic Bin Switch		
8a	000007410	Bin Switch Wiring Harness		
9		Air Assist		
9a	000007223	Air Assist - 230V/50-60 Hz		
9b	4011739	Air Manifold		[3]
9c	000006489	Air Assist Bracket		
9d	3001453	Air Assist Nozzle		
10	K00424	LuminIce		
10a	K00425	LuminIce Bulb		
10b	000007409	LuminIce Wiring Harness		
10c	000007990	Bulkhead Fitting 2.25"		
10d	000008269	Bulkhead Fitting 2.75"		
11	000003408	Insulated Tube		[4]
11a	5650603	Snap Clamp - 1.0" ID		
11b	5650703	Snap Clamp - 0.799"/0.899" ID		
12	000001382	Vinyl Tubing 0.625" ID		[5]
12a	6038831	Insulation 0.88 ID X 0.25W X 13.50L		
12b	5650709	Snap Clamp - 0.799"/0.899" ID		
13	8706093	Female Wing Adapter - 0.375"		
13a	1360961	Male Connector		
14	4010439	Tubing - Water Inlet Valve		[6]
15	1360989	Connector - Water Inlet Valve		

I1200 REFRIGERATION COMPARTMENT - COMMON COMPONENTS

#	PART #	DESCRIPTION	QTY	Note
16	8706133	Female Wing Adapter - 0.50"		
17		Compressor Mounting		
17a	6061709	Compressor Mounting Base		
17b	8503069	Mounting - Rubber Grommet		
17c	8503949	Mounting - Sleeve		
17d	5004819	Compressor Mounting - Bolt		
17e	5004829	Compressor Mounting - Nut		
18	5650529	Clamp - Expansion Valve Bulb		
19	3000503	Strap - Expansion Valve Bulb - 0.5"		
20	5202069	Screw - #10-24 x 0.50" HEX		

PART NOTES:

[1] - with bracket
[2] - \pages from 400720_08.jpg" width=923 height=583>
[3] - Air Pump Tubing Outlet
[4] - vinyl tubing from distribution tube to water pump & dump valve
[5] - dump valve to drain adapter
[6] - \pages from 401043_05.jpg" width=1797 height=2238>

I1200 REFRIGERATION COMPARTMENT – AIR-COOLED

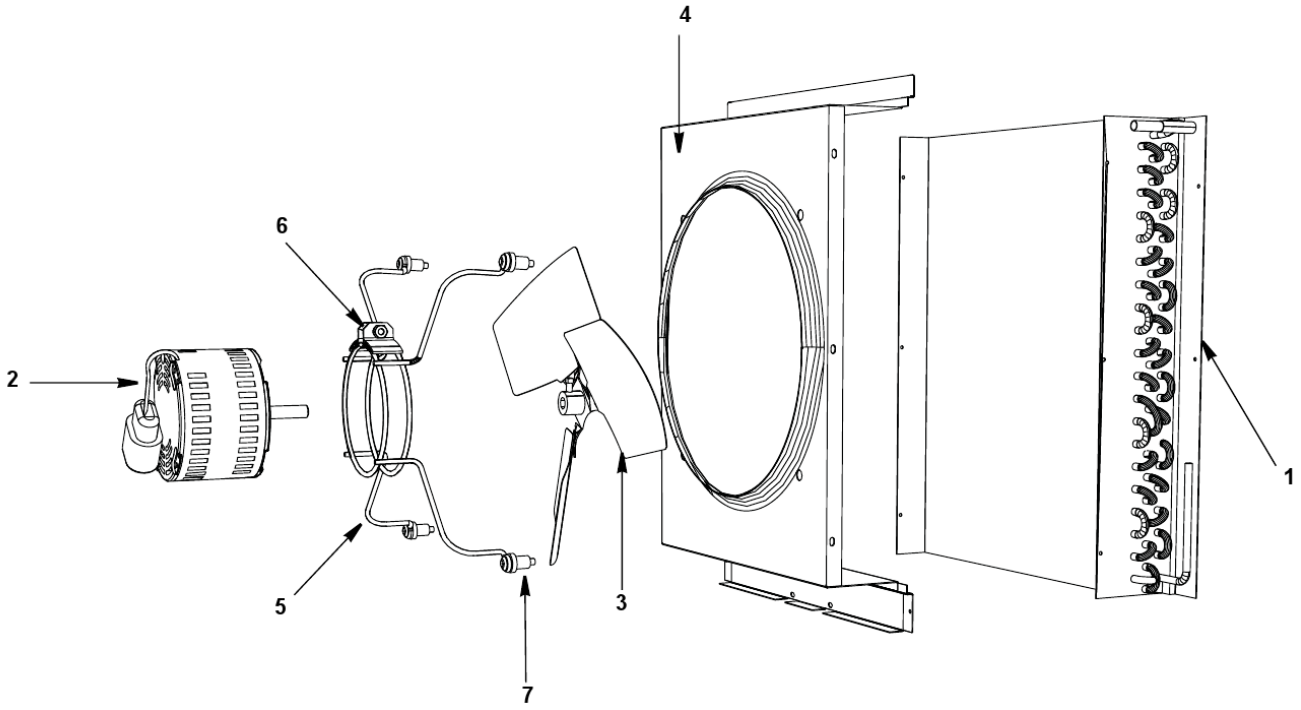

I1200 REFRIGERATION COMPARTMENT – AIR-COOLED

#	PART #	DESCRIPTION	QTY	Note
1	8252959	Air Condenser		
2	000003033	Fan Motor - 208-230V/50-60 Hz		
3	2416123	Fan Blade		
4	6068799	Fan Shroud		
5	3006843	Fan Motor Bracket		
6		Fan Motor Mounting		
6a	5033589	Mounting - Screw		
6b	5545109	Lockwasher		
6c	5429529	Mounting - Hexnut		
7		Fan Bracket Mounting		
7a	5032389	Fan Bracket Mounting Screw		
7b	5545109	Lockwasher		
7c	5573059	Mounting - Flatwasher		
7d	5429559	Mounting - Rubber Wellnut		
8	5202069	Screw - #10-24 x 0.50" HEX		

I1200 REFRIGERATION COMPARTMENT – WATER-COOLED

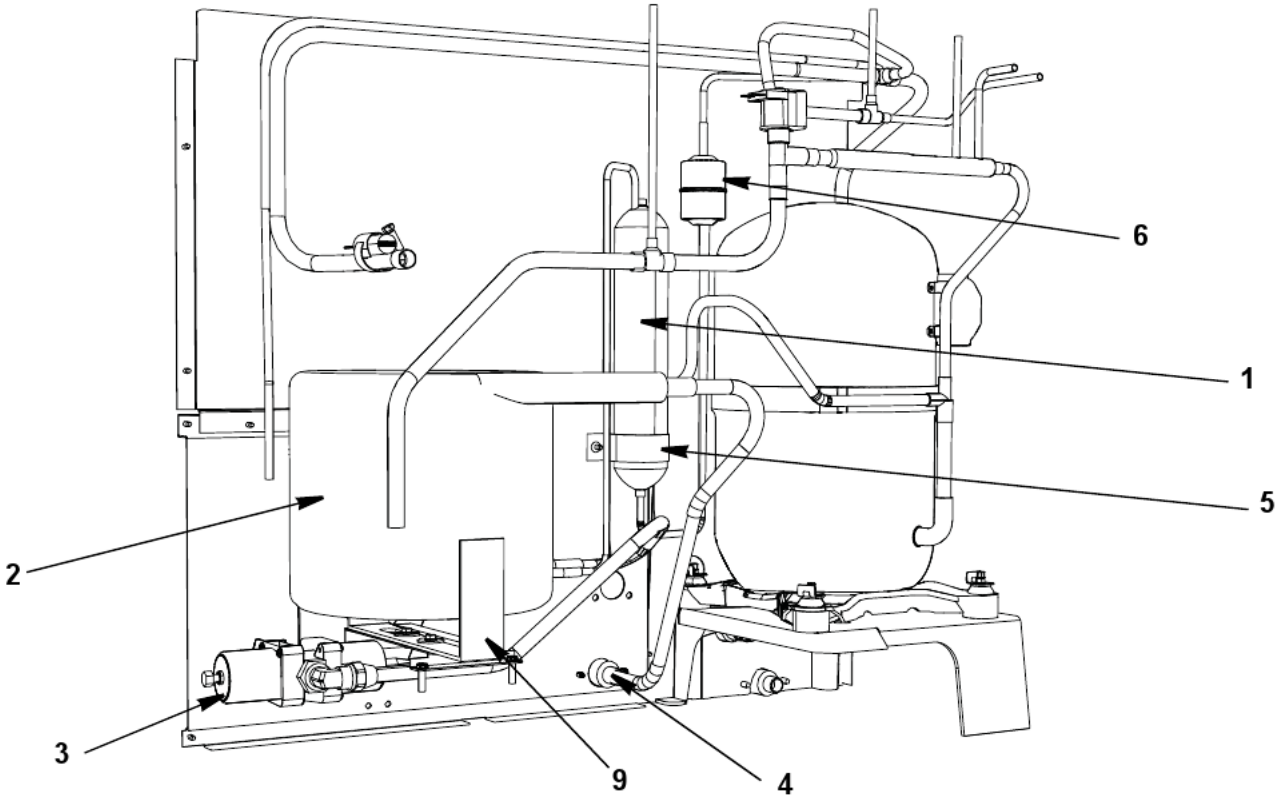

I1200 REFRIGERATION COMPARTMENT – WATER-COOLED

#	PART #	DESCRIPTION	QTY	Note
1	000008893	Receiver		
2	000001508	Water-Cooled Condenser		
3	8372123	Water Regulating Valve		
4	8706083	Female Wing Adapter - 0.50"		
5	6000541	Receiver Strap		
6	5002249	Elbow 1/2 MF x 3/8 MPT		
7	5202063	Screw - #10-24 x 0.50" HEX		
8	5573419	Washer		
9	6058659	Base, Water Condenser/Receiver		

I1200 PANELS

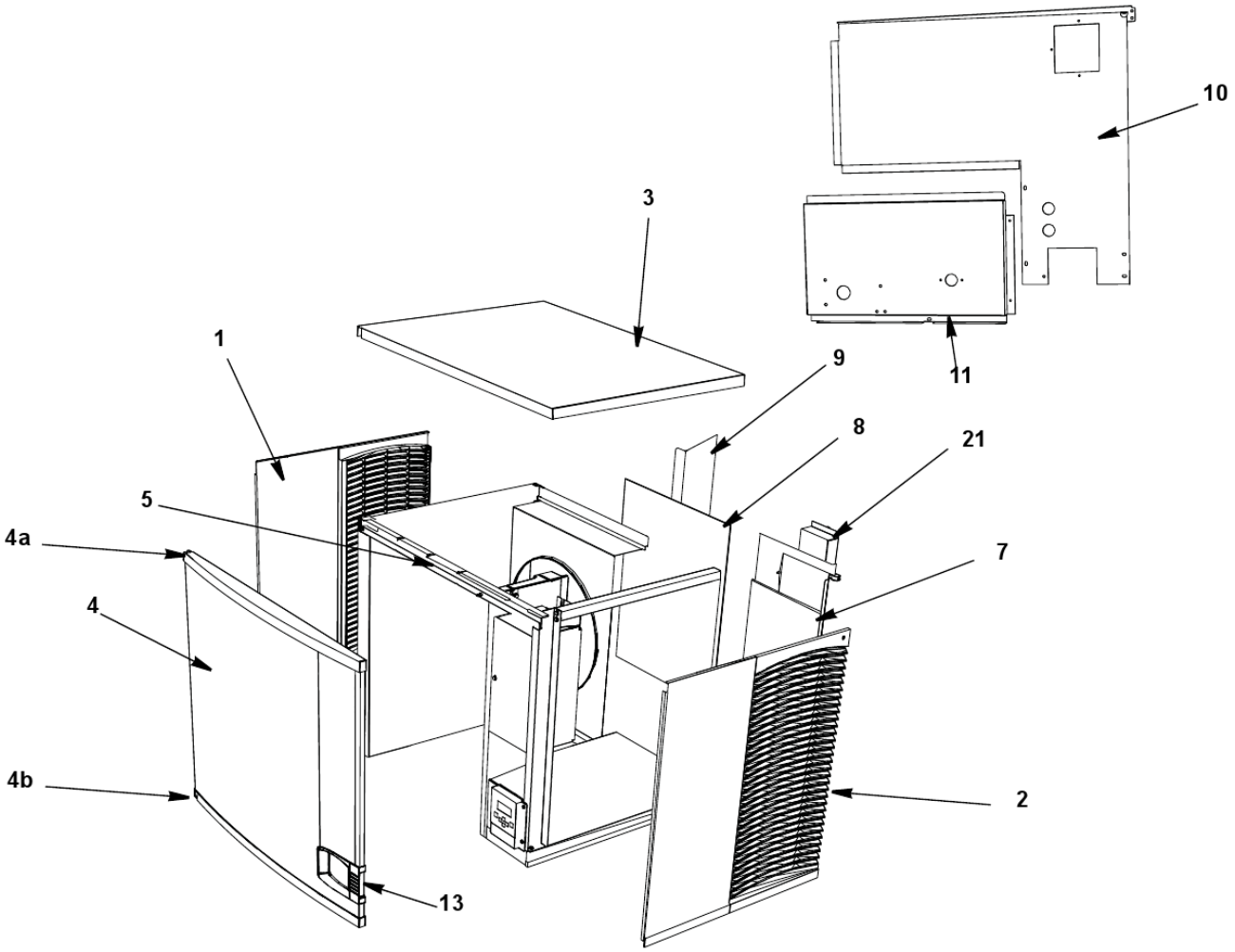

I1200 PANELS

#	PART #	DESCRIPTION	QTY	Note
1	000005239	Left Panel - Standard		
2	000005237	Right Panel - Standard		
3	000006699	Top Cover		
4	000007045	Front Panel Assembly		
4a	000006538	Top Endcap		
4b	000006539	Bottom Endcap		
5	000010051	Front Top Support		
	5005379	Mounting Screw - #8-32 x 1" PHIL		
	5005099	Mounting Screw - #10-16 x 0.625" PHIL		
6	6061709	Compressor Mounting Base		
		Air-cooled Back Panels		
7	6069389	Back Panel with Electrical Connection Box, Air-cooled Models		
8	4040213	Air Filter		
9	000007678	Air Baffle Assembly		
		Water-cooled & Remote Air-cooled Back Panels		
10	6072501	Back Panel with Electrical Connection Box,		
11	6069189	Back Coupling Panel, Water Connections		
12	8706083	Female Wing Adapter - 0.50"		
13		Front Panel LCD Frame		
13a	000006647	LCD Frame with Key Guard		
13b	000006564	LCD Frame without Key Guard		
13c	K00433	Display Cover		[1]
14	5004899	Front Door Screw		
15	7602263	Bottom Door Frame		
15a	5005379	Mounting Screw - #8-32 x 1" PHIL		
15b	5202099	Screw - #10-24 x 0.50" PHIL		
16	3005579	Left Door Pivot Leaf Hinge		[2]
16a	5005379	Mounting Screw - #8-32 x 1" PHIL		
17	6068659	Left Corner Post		
18	6068649	Left Top Channel		
19	6061779	Right Corner Post		
20	6062579	Right Top Channel		
21		Electrical Box on Rear of Ice Machine		
21a		Box with Cover		[3]
21b	2006143	Terminal Block - 50 Hz - 3 Pole		
21c	5202169	Screw - #10-24 x 0.50" Ground		
22	7112429	Cartoning		

PART NOTES:

[1] - hides the display completely
[2] - Top or Bottom
[3] - Included in Back Panel Assembly