Manitowoc

Foodservice

Parts Manual

For more Parts Information:
https://manitowocfsg.sysonline.com/Default.aspx

TABLE OF CONTENTS

Manitowoc Foodservice [Updated: Sep. 30, 2013]
Manitowoc - Ice & Related
Parts Catalog
Ice Machine
Indigo Series
Indigo Model - Air, Water & Remote
i0500, JC0495 Indigo
i0500 Control Box 1
i0500 Evaporator Compartment - Common Components 4
i0500 Refrigeration Compartment - Common Components 7
i0500 Refrigeration Compartment – Air-cooled 10
i0500 Refrigeration Compartment – Water-cooled 12
i0500 Refrigeration Compartment – Remote 14
i0500 Panels 16
JC0495 Remote Condenser 19

i0500, JC0495 Indigo

I0500 CONTROL BOX

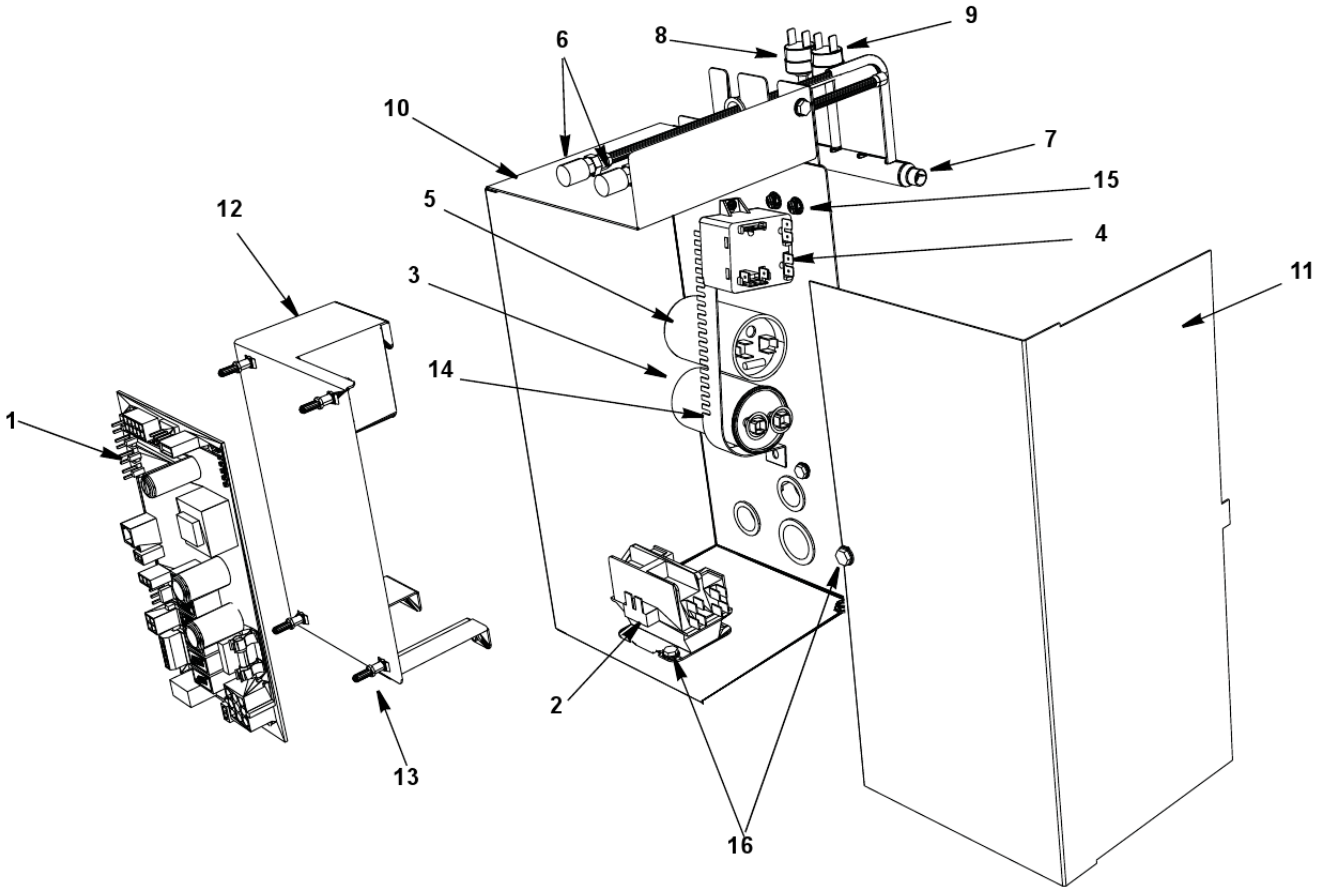

I0500 CONTROL BOX

#	PART #	DESCRIPTION	QTY	Note
1	000008309	Control Board		
1a	000009181	8 amp Ceramic Fuse - Mounted on Control Board		
2		Contactor		
2a	2006589	Contactor - 115V/60 Hz/1 Ph		
2b	2006599	Contactor - 230V/50-60 Hz/1 Ph		
2c	000008924	Contactor - R290 230V/50 Hz/1ph		
3		Compressor Run Capacitor		
3a	2010143	Run Capacitor - 115V/60 Hz/1 Ph		
3b	8504003	Run Capacitor - 208-230V/50-60 Hz/1 Ph		
3c	2009493	Run Capacitor - 208-230V/50-60 Hz/1 Ph		[1]
4		Start Potential Relay		
4a	2002053	Start Potential Relay - 115V/60 Hz/1 Ph		
4b	2007929	Start Potential Relay - 208-230V/50-60 Hz/1 Ph		
5		Start Capacitor		
5a	8505773	Start Capacitor - 115V/60 Hz/1 Ph		
5b	8503833	Start Capacitor - 208-230V/50-60 Hz/1 Ph		
5c	8503723	Start Capacitor - 208-230V/50-60 Hz/1 Ph		
6	8373263	Refrigeration Service Valve Assembly		
7	8251049	Manifold Strainer		
7a	6058571	Bracket		
8	2001243	High Pressure Cut-out Control		
8a	000008876	High Pressure Cut-out Control - R290 230V/50 Hz/1 Ph		
9	2001263	Fan Cycling Control - 200-250 psig		[2]
9a	000008877	Fan Cycling Control - R290 230V/50 Hz/1 Ph		
10	000008279	Control Box		
11	000010421	Control Box Cover		
12	000007564	Control Board Mounting Bracket		
13	4302253	Control Board Mounting Supports		
14	6024953	Capacitor Mounting Strap		
15	5202169	Screw - #10-24 x 0.50" Ground		
15a	5573209	Star Washer		
16	5202069	Screw - #10-24 x 0.50" HEX		
17	5573209	Star Washer		
18		Control Box Bushings		
18a	2500019	Bushing - 1.187"		
18b	2501409	Bushing - 0.875"		
19		Control Box Wiring Harness		
19a	000007172	Control Box Wiring Harness - 115V/60 Hz/1 Ph		
19b	000007173	Control Box Wiring Harness - 230V/60 Hz/1 Ph		
19c	000007174	Control Box Wiring Harness - 230V/50 Hz/1 Ph		
19d	000009996	Control Box Wiring Harness R290 - 230V/50 Hz/1 Ph to Control Board		
20		Compressor Compartment Wiring Harness		

I0500 CONTROL BOX

#	PART #	DESCRIPTION	QTY	Note
20a	000007178	Compressor Compartment Wiring Harness - Air-cooled		
20b	000007176	Compressor Compartment Wiring Harness - Water-cooled		
20c	000007175	Compressor Compartment Wiring Harness - Remote Air-cooled		
21	000009209	R290 Contactor Box		
21a	000009210	R290 Contactor Box Cover		
21b	000009211	R290 Contactor Box False Bottom		
21c	000009229	R290 Liquid Tight Cord Grip		
21d	000009262	R290 Contactor Wiring Harness - 230V/50 Hz/1 Ph		
21e	2004603	R290 Terminal Blocks - 230V/50 Hz/1 Ph		

PART NOTES:

[1] - R290 Only

[2] - \pages from 200126_09.jpg" width=150 height=306>

I0500 EVAPORATOR COMPARTMENT - COMMON COMPONENTS

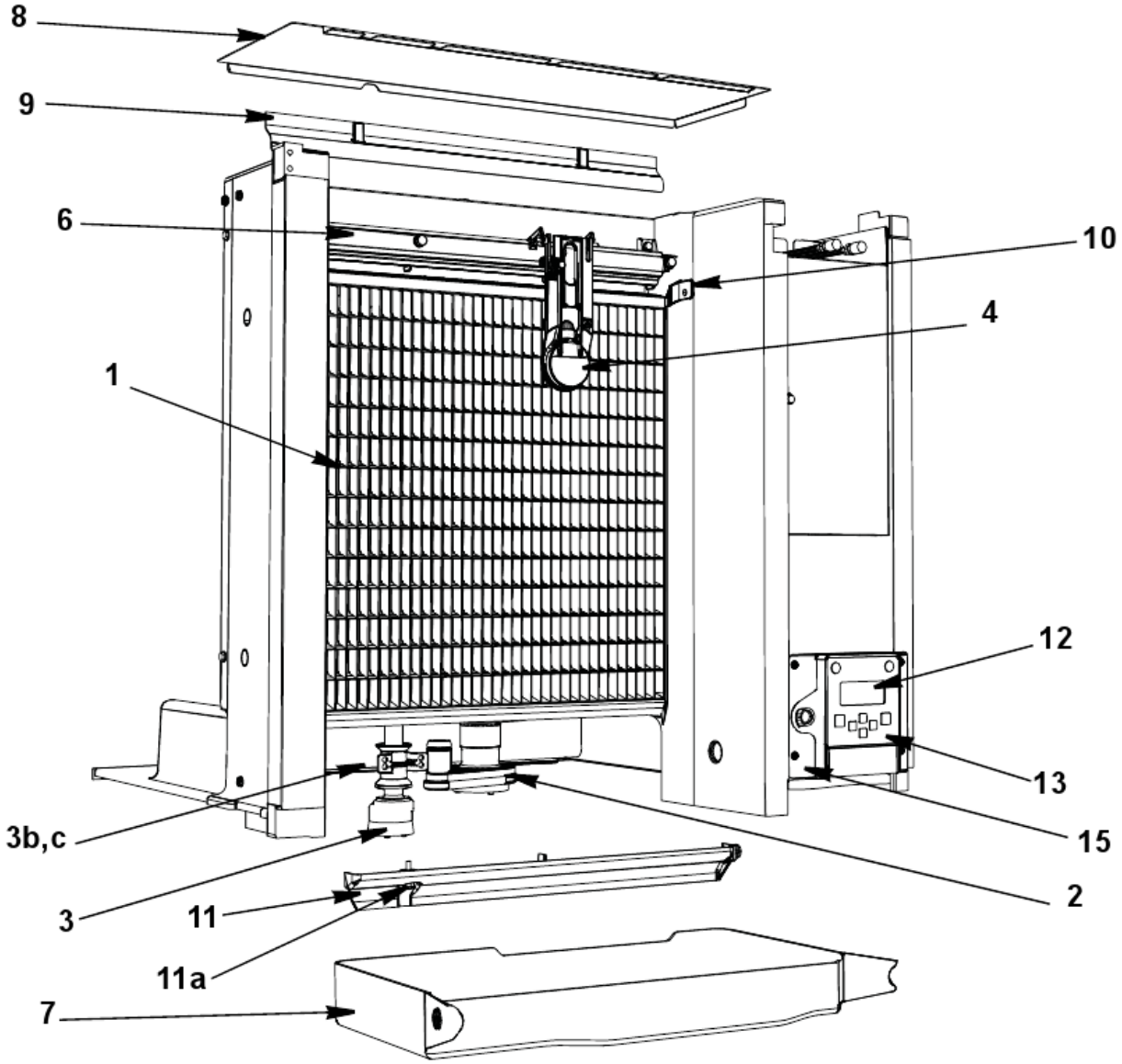

I0500 EVAPORATOR COMPARTMENT - COMMON COMPONENTS

#	PART #	DESCRIPTION	QTY	Note
1		Evaporator Assembly		
1a	7602839	Evaporator - Dice Cube		
1b	7602849	Evaporator - Half Dice Cube		
1c	7602859	Evaporator - Regular Cube		
2		Water Pump		
2a	8251129	Water Pump - 115V/60 Hz		
2b	2007399	Water Pump - 230V/60 Hz		
2c	8252109	Water Pump - 230V/50-60 Hz		
3	000007052	Water Level Probe		
3a	000007099	Wire - Control Box to Probe		
3b	000007053	Water Level Probe - Holder		
3c	5202099	Screw - #10-24 x 0.50" PHIL		[1]
4	000008660	Ice Thickness Control Probe		
5	4010979	Water Curtain		
6	7602193	Water Distribution Tube - 30" Models		
6a	5004649	O-Rings		[2]
7		Water Trough - See Note for Serial Break		
7a	4003609	Water Trough		[3]
7b	000010337	Water Trough		[4]
8	000009055	Foodzone Seal Panel		
9	4008469	Evaporator Top Filler Panel		
9a	6063339	Bracket - Top Filler Panel		
9b	5202099	Screw - #10-24 x 0.50" PHIL		
10	7602203	Evaporator Top Frame Assembly		
11	7602213	Water Diverter - 30" Models		
11a	5305123	Thumbscrew SS - #8-32 x 0.44"		
12	000006728	LCD Display		
13	000007926	Touch Pad with Housing		
14	000007737	LCD Wiring Harness - 30" Long		
15	000006697	Touch Pad/Housing Mounting Bracket		
16		Front Panel LCD Frame		
16a	000006647	LCD Frame with Key Guard		
16b	000006564	LCD Frame without Key Guard		
16c	K00433	Display Cover		[5]
17	5004799	Thumbscrew SS - #8-32 x 0.375"		[6]
17a	5004629	O-Ring - 0.125" ID		
18	5004619	Screw - #12-16 x 0.687"		
19	5004659	Water Pump Base O-Ring - 4.00" ID		
20	5004679	Water Pump Outlet O-Ring - 0.875" ID		

PART NOTES:

[1] - Mount Water Level Probe Holder

I0500 EVAPORATOR COMPARTMENT - COMMON COMPONENTS

#	PART #	DESCRIPTION	QTY	Note

PART NOTES:

[2] - Back of Distribution Assembly

[3] - Before Serial Number 1101223883
\water trough.jpg" width=313 height=169>

[4] - After Serial Number 1101223883
\water trough with tabs.jpg" width=355 height=194>

[5] - hides the display completely

[6] - Water Distribution Tube Mounting Each

I0500 REFRIGERATION COMPARTMENT - COMMON COMPONENTS

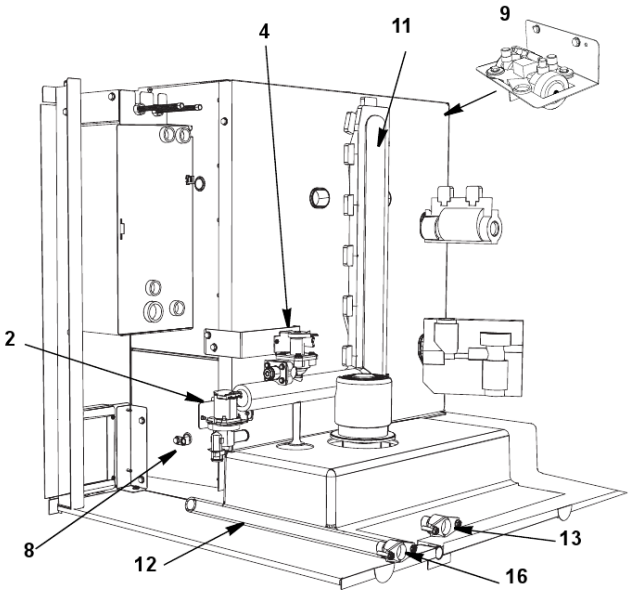

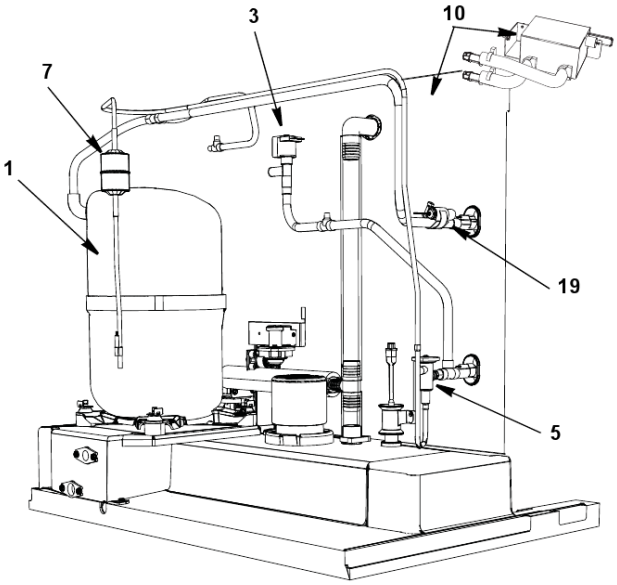

I0500 REFRIGERATION COMPARTMENT - COMMON COMPONENTS

#	PART #	DESCRIPTION	QTY	Note
1		Compressor		
1a	000003919	Compressor - Danfoss SC15MLX.2 - 115V/60 Hz/1 Ph		
1b	000003920	Compressor - Danfoss SC15MLX.2 - 208-230V/50-60 Hz/1 Ph		
1c	000010044	Compressor - R290 230V/50 Hz/1ph		
1d	8251403	Overload - 115V/60 Hz/1 Ph		
2		Water Dump Valve		[1]
2a	000001767	Water Dump Valve - 115V/60 Hz		
2b	000001768	Water Dump Valve - 208-230V/50-60 Hz		
2c	6058459	Water Dump Valve Mounting Bracket		
2d	4420383	Clear Tubing - 0.625" ID		
3		Harvest Valve		
3a	000007027	Solenoid Valve with Electrical Coil - 115V/60 Hz		
3b	000005156	Danfoss Solenoid Valve Coil Only - 115V/60 Hz		[2]
3c	000007026	Solenoid Valve with Electrical Coil - 208-230V/50 Hz		
3d	000005157	Danfoss Solenoid Valve Coil Only - 230V/50-60 Hz		[3]
4		Water Inlet Valve		
4a	000007965	Water Inlet Valve - 115V/60 Hz/1 Ph		
4b	000007966	Water Inlet Valve - 208-230V/50-60 Hz		
4c	000007594	Water Inlet Valve Bracket		
5	7601583	Expansion Valve		
5a	000008875	R290 230V/50 Hz/1ph		
5b	4000363	Valve Insulation Boot - Body		
5c	4007203	Valve Insulation Boot - Bulb		[4]
6	000008310	Thermistor with Spring Clips		
7		Drier		
8	000007888	Magnetic Bin Switch		
8a	000007410	Bin Switch Wiring Harness		
9		Air Assist		
9a	000007222	Air Assist - 115V/60 Hz		
9b	000007223	Air Assist - 230V/50-60 Hz		
9c	4011739	Air Manifold		[5]
9d	000006489	Air Assist Bracket		
9e	3001453	Air Assist Nozzle		
10	K00424	LuminIce		
10a	K00425	LuminIce Bulb		
10b	000007409	LuminIce Wiring Harness		
10c	000007990	Bulkhead Fitting 2.25"		
10d	000008269	Bulkhead Fitting 2.75"		
11	000003405	Insulated Tube		[6]
11a	5650603	Snap Clamp - 1.0" ID		
11b	5650703	Snap Clamp - 0.799"/0.899" ID		
12	000001382	Vinyl Tubing 0.625" ID		[7]

I0500 REFRIGERATION COMPARTMENT - COMMON COMPONENTS

#	PART #	DESCRIPTION	QTY	Note
12a	6038831	Insulation 0.88 ID X 0.25W X 13.50L		
12b	5650709	Snap Clamp - 0.799"/0.899" ID		
13	8706093	Female Wing Adapter - 0.375"		
13a	1360961	Male Connector		
14	4010439	Tubing - Water Inlet Valve		[8]
15	1360989	Connector - Water Inlet Valve		
16	8706133	Female Wing Adapter - 0.50"		
17		Compressor Mounting		
17a	6061709	Compressor Mounting Base		
17b	8503069	Mounting - Rubber Grommet		
17c	8503949	Mounting - Sleeve		
17d	5004819	Compressor Mounting - Bolt		
17e	5004829	Compressor Mounting - Nut		
18	5650529	Clamp - Expansion Valve Bulb		
19	3000503	Strap - Expansion Valve Bulb - 0.5"		
20	5202069	Screw - #10-24 x 0.50" HEX		

PART NOTES:

[1] - (with bracket)
[2] - \pages from 000005156_02.jpg" width=280 height=256>
[3] - \pages from 000005156_02.jpg" width=266 height=183>
[4] - \pages from 400720_08.jpg" width=923 height=583>
[5] - (Air Pump Tubing Outlet)
[6] - (vinyl tubing from distribution tube to water pump & dump valve)
[7] - (dump valve to drain adapter)
[8] - \pages from 401043_05.jpg" width=1797 height=2238>

I0500 REFRIGERATION COMPARTMENT – AIR-COOLED

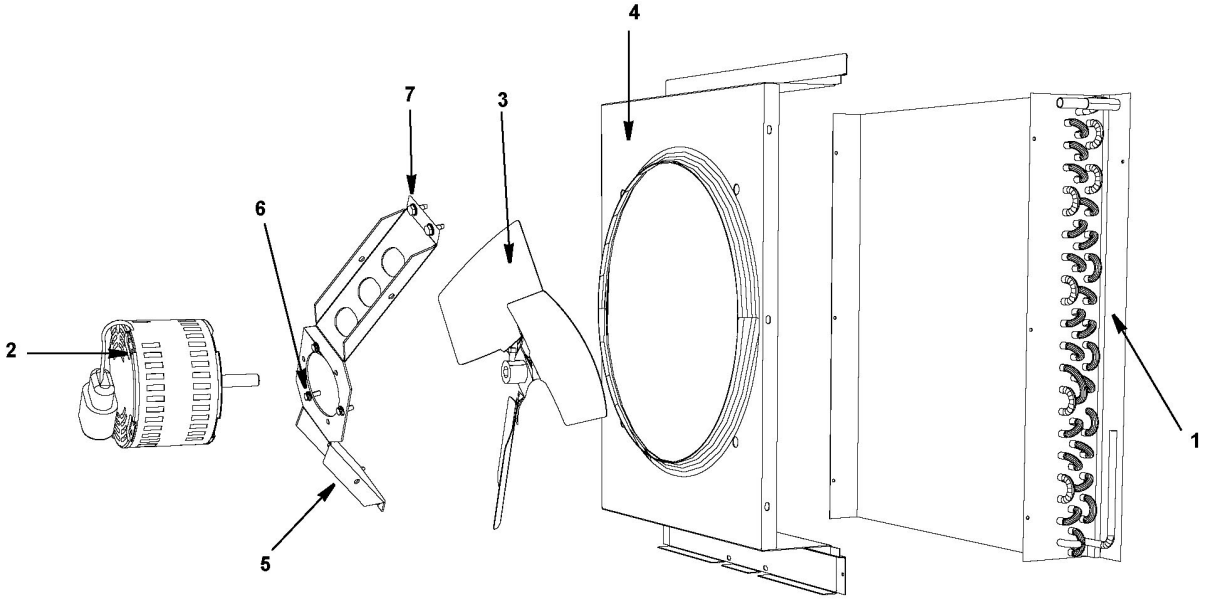

I0500 REFRIGERATION COMPARTMENT – AIR-COOLED

#	PART #	DESCRIPTION	QTY	Note
1	8252139	Air Condenser		
1a	000008785	Air Condenser - R290 230V/50 Hz/1 Ph		
1b	000009061	Air Condenser Mounting Plates - R290 230V/50 Hz/1 Ph		
2		Fan Motor		
2a	2412929	Fan Motor 115V/60 Hz/1 Ph		
2b	2412939	Fan Motor 208-230V/50-60 Hz		
3	2416203	Fan Blade		
4	000002484	Fan Shroud		
4a	000008921	Fan Shroud - R290 230V/50 Hz/1 Ph		
5	6061869	Fan Motor Bracket		
6	5033589	Mounting - Screw		
6a	5545109	Lockwasher		
6b	5429529	Mounting - Hexnut		
7		Fan Bracket Mounting		
7a	5032389	Fan Bracket Mounting Screw		
7b	5545109	Lockwasher		
7c	5573059	Mounting - Flatwasher		
7d	5429559	Mounting - Rubber Wellnut		
8	5202069	Screw - #10-24 x 0.50" HEX		
9	8930259	Drier		

I0500 REFRIGERATION COMPARTMENT – WATER-COOLED

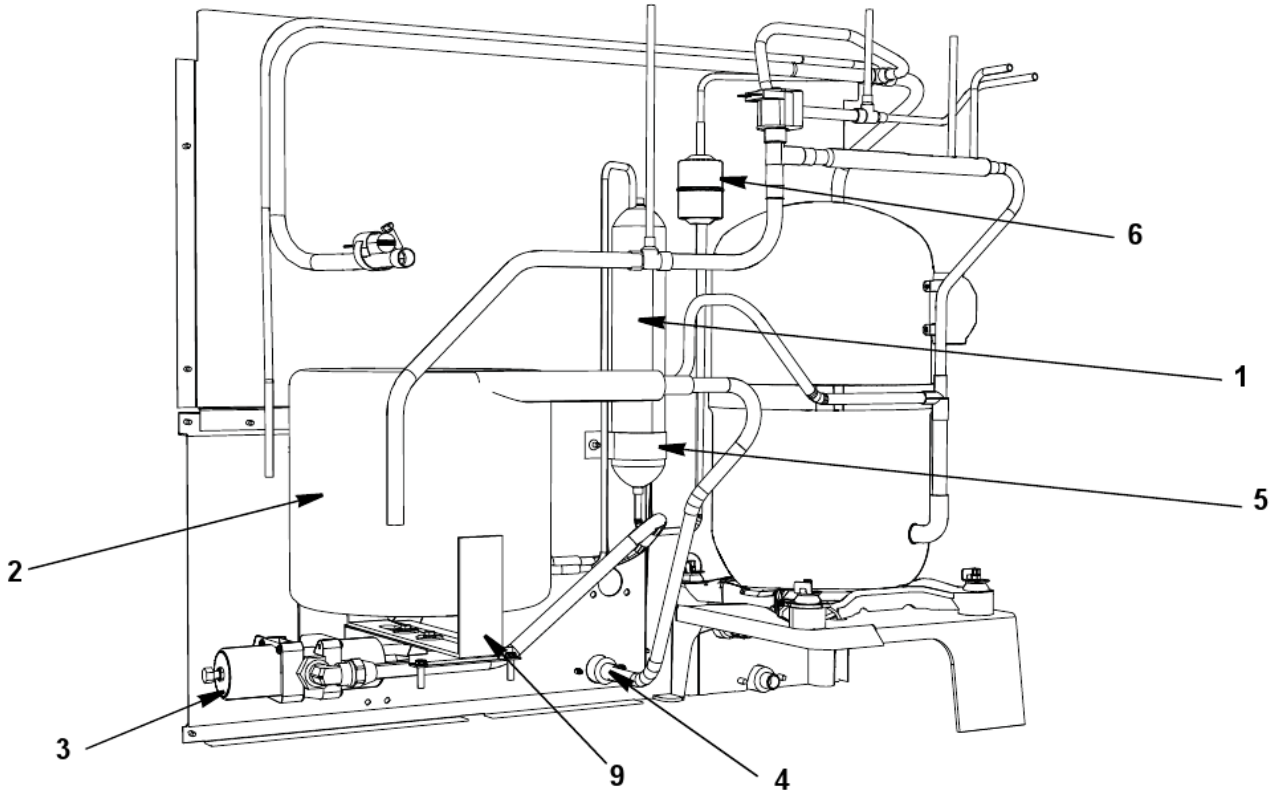

I0500 REFRIGERATION COMPARTMENT – WATER-COOLED

#	PART #	DESCRIPTION	QTY	Note
1	000008892	Receiver		
2	8865333	Water-cooled Condenser		
3	8372069	Water Regulating Valve		
3a	000007695	Bracket - Water Regulating Valve		
4	000007553	High Pressure Water Regulating Valve		
4a	000008482	Panel - High Pressure Regulating Valve		
5	8706083	Female Wing Adapter - 0.50"		
6	6000541	Receiver Strap		
7	5002159	Elbow 3/8 MF x 3/8 MPT		
8	5202069	Screw - #10-24 x 0.50" HEX		
9	5573419	Mounting Washer		
10	6058659	Base, Water Condenser/Receiver		

I0500 REFRIGERATION COMPARTMENT – REMOTE

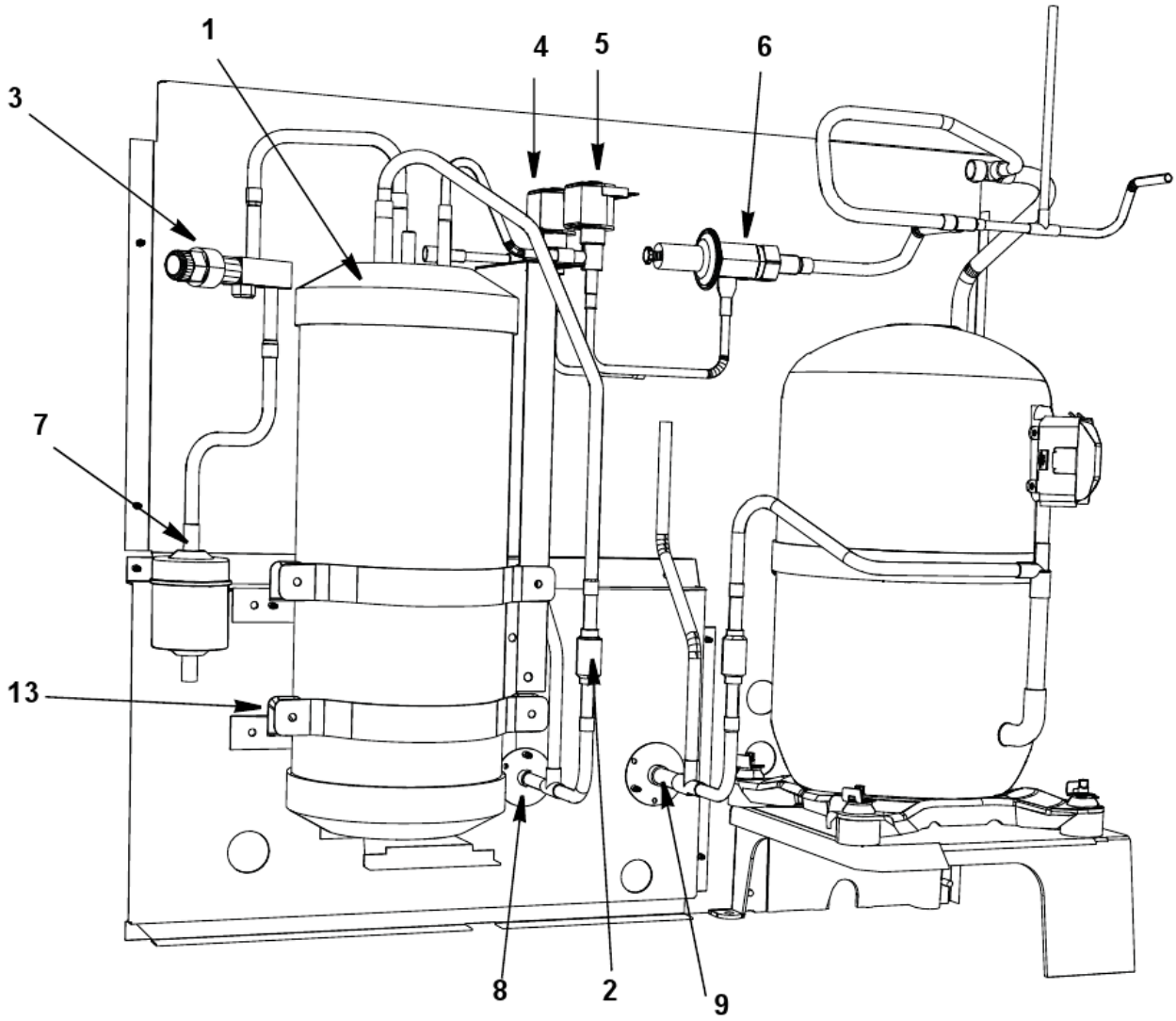

I0500 REFRIGERATION COMPARTMENT – REMOTE

#	PART #	DESCRIPTION	QTY	Note
1	8250583	Receiver		
2	8373149	Magni-Check Valve - 0.375"		
3	8373169	Receiver Service Valve		
3a	5650759	Cap for Refrigeration Service Valve		
4		Harvest Pressure Regulating Solenoid (HPR) Valve		
4a	000007035	Danfoss Solenoid Valve Including 115V/60 Hz Coil		
4b	000005156	Danfoss Solenoid Valve Coil Only - 115V/60 Hz		[1]
5		Liquid Line Solenoid (LLS) Valve		
5a	000007035	Danfoss Solenoid Valve Including 115V/60 Hz Coil		
5b	000005156	Danfoss Solenoid Valve Coil Only - 115V/60 Hz		[1]
6	8367793	Harvest Pressure Regulating Valve		
7	8930279	Drier		
8	8360343	Coupling - Male - 5/8-18		
9	8360353	Coupling - Male - 1-1/6-12		
10	8360053	Coupling Mounting Flange for 5/8-18		
11	8360063	Coupling Mounting Flange for 1-1/16-12		
12	5650619	Screw Mounting Base		
13		Receiver Mounting		
13a	6000561	Receiver Mounting Bracket		
13b	6307214	Receiver Mounting Strap		
13c	000006721	Support Bracket		
13d	6058659	Base, Water Condenser/Receiver		
13e	5202069	Screw - #10-24 x 0.50" HEX		

PART NOTES:

[1] - \pages from 000005156_02.jpg" width=280 height=256>

I0500 PANELS

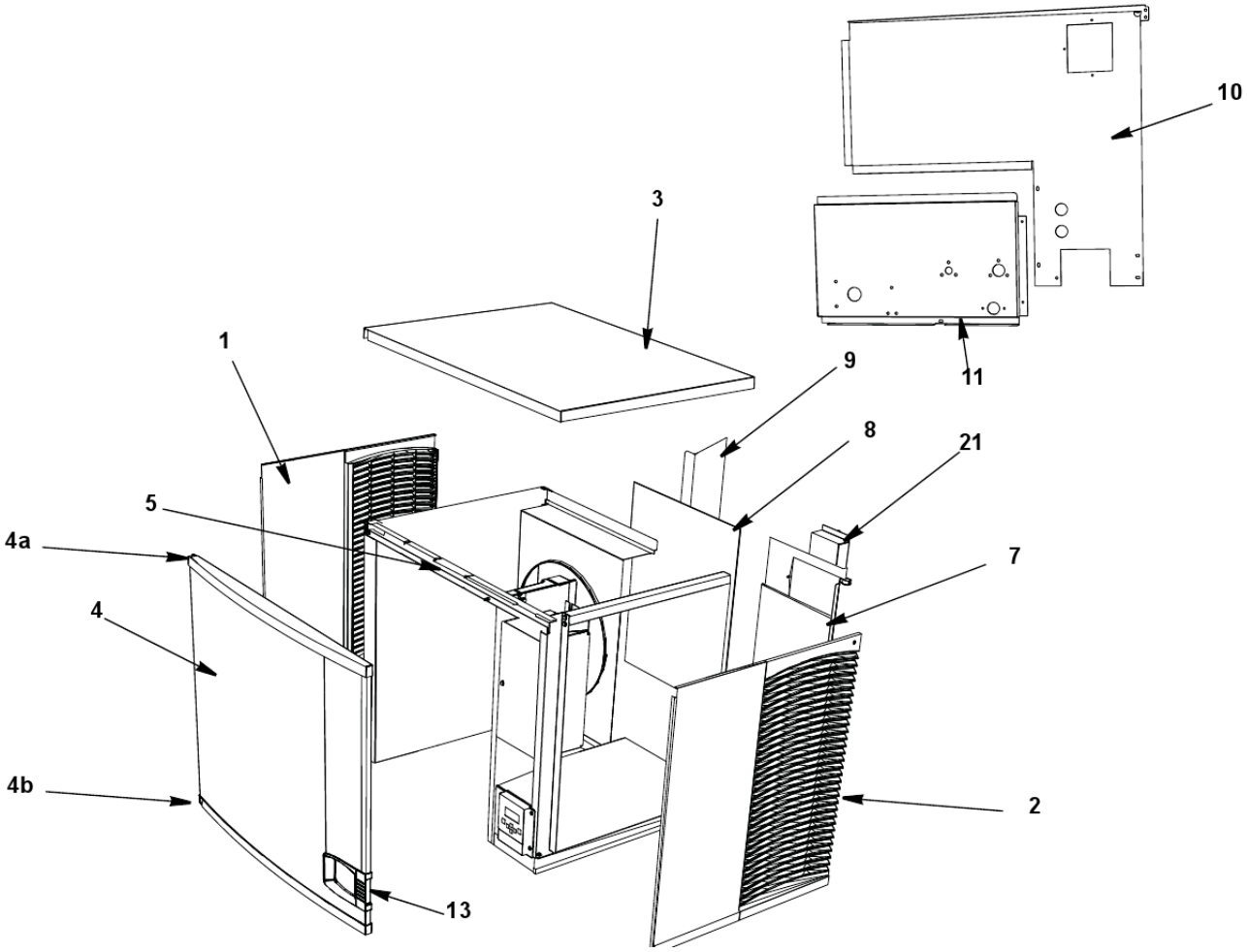

I0500 PANELS

#	PART #	DESCRIPTION	QTY	Note
1	000005217	Left Side Panel		
2	000005215	Right Side Panel		
3	000006699	Top Cover		
4	000006577	Front Panel Assembly		
4a	000006538	Top Endcap		
4b	000006539	Bottom Endcap		
5	000010051	Front Top Support		
5a	5005379	Mounting Screw - #8-32 x 1" PHIL		
5b	5005099	Mounting Screw - #10-16 x 0.625" PHIL		
6	6061709	Compressor Mounting Base		
		Air-cooled Back Panels		
7	6062969	Back Panel with Electrical Connection Box - Air-cooled Models		
7a	000008922	Back Panel - R290 230V/50 Hz/1 Ph		
8	3005569	Air Filter		
8a	000008923	Air Filter - R290 230V/50 Hz/1 Ph		
9	000007314	Air Baffle Assembly		
		Water-cooled & Remote Air-cooled Back Panels		
10	6072071	Back Panel with Electrical Connection Box - Water-cooled and Remote Air-cooled		
11	6061739	Back Coupling Panel - Water-cooled and Remote Air-cooled		
12	8706083	Female Wing Adapter - 0.50"		
13		Front Panel LCD Frame		
13a	000006647	LCD Frame with Key Guard		
13b	000006564	LCD Frame without Key Guard		
13c	K00433	Display Cover		[1]
14	5004899	Front Door Screw		
15	7602263	Bottom Door Frame		
15a	5005379	Mounting Screw - #8-32 x 1" PHIL		
15b	5202099	Screw - #10-24 x 0.50" PHIL		
16	3005579	Left Door Pivot Leaf Hinge		[2]
16a	5005379	Mounting Screw - #8-32 x 1" PHIL		
17	6068649	Left Top Channel		
18	6062579	Right Top Channel		
19		Left Corner Post - See Note for Serial Break		
19a	6062939	Left Corner Post		[3]
19b	000010299	Left Corner Post		[4]
20		Right Corner Post - See Note for Serial Break		
20a	6062929	Right Corner Post		[3]
20b	000010680	Right Corner Post		[4]
21		Electrical Box on Rear of Ice Machine		
21a		Box with Cover		[5]
21b	2006143	Terminal Block - 50 Hz - 3 Pole		
21c	5202169	Screw - #10-24 x 0.50" Ground		

I0500 PANELS

#	PART #	DESCRIPTION	QTY	Note

PART NOTES:

[1] - hides the display completely
[2] - Top or Bottom
[3] - Before Serial Number 1101223883
[4] - After Serial Number 1101223883
[5] - Included in Back Panel Assembly

JC0495 REMOTE CONDENSER

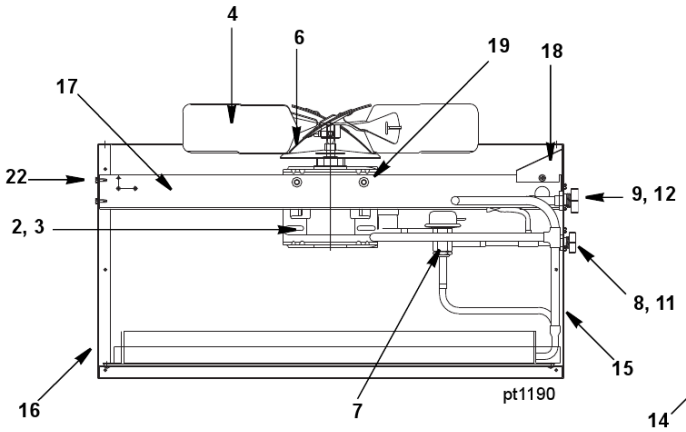

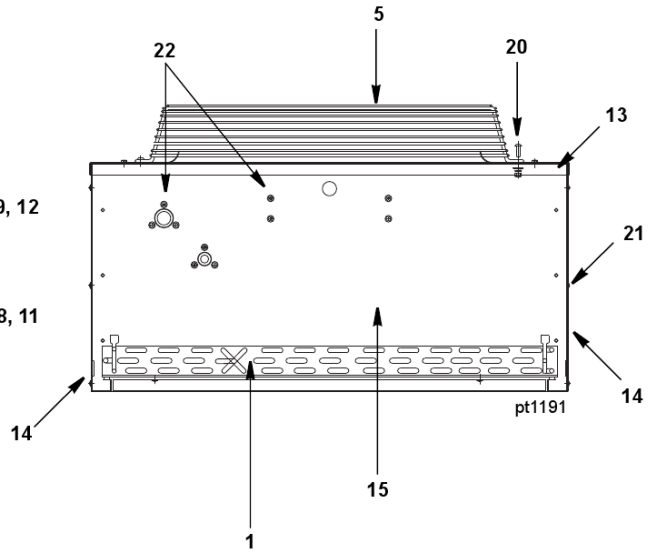

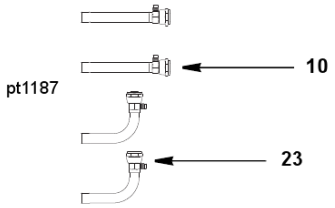

JC0495 REMOTE CONDENSER

#	PART #	DESCRIPTION	QTY	Note
1	8850639	Air Condenser		
2	7629423	Fan Motor - 115V/60 Hz/1 Ph		
3		Fan Motor Run Capacitor		[1]
4	2416113	Fan Blade		
5	3400643	Fan Guard		
6	2415053	Rain Slinger		
7	000004070	Head Pressure Control Valve		
8	8360343	Coupling - Male - 5/8-18		
9	8360353	Coupling - Male - 1-1/6-12		
10	K0129	Female Line Set Coupling Kit		
11	8360053	Coupling Mounting Flange for 5/8-18		
12	8360063	Coupling Mounting Flange for 1-1/16-12		
13	6017751	Top Cover		
14	6017741	Panel - Side		
15	6017731	Panel - Rear		
16	6017721	Panel - Front		
17	6017681	Fan Motor Mounting Bracket		
18	6017761	Electrical Box Cover		
19	5035659	Fan Motor Mounting Screw		[2]
19a	5573099	Mounting - Flatwasher		
19b	5573139	Mounting - Lockwasher		
19c	5429759	Mounting - Hexnut		
20	5033459	Screw - 1/4-20 x 0.625"		
20a	5573049	Flatwasher		
20b	5545119	Mounting - Lockwasher		
20c	5429529	Mounting - Hexnut		
21	5121539	Panel/Condenser Mounting Screw - #8 x 0.50"		
21a	5544599	Panel/Condenser Mounting Lockwasher		
22	5202069	Screw - #10-24 x 0.50" HEX		
23	7626843	Valve Cores		[3]
24	7108369	Cartoning		

PART NOTES:

[1] - No Longer Available
[2] - 5/16-18 x 5/8
[3] - used in line sets