Manitowoc

Foodservice

Parts Manual

For more Parts Information:
https://manitowocfsg.sysonline.com/Default.aspx

TABLE OF CONTENTS

Manitowoc Foodservice [Updated: Sep. 30, 2013]
Manitowoc - Ice & Related
Parts Catalog
Ice Machine
RFS Series
RFS Model - Air & Water
RFS0300
RFS0300 Evaporator Assembly 1
RFS0300 Evaporator Compartment 3
RFS0300 Panels 6

RFS0300 EVAPORATOR ASSEMBLY

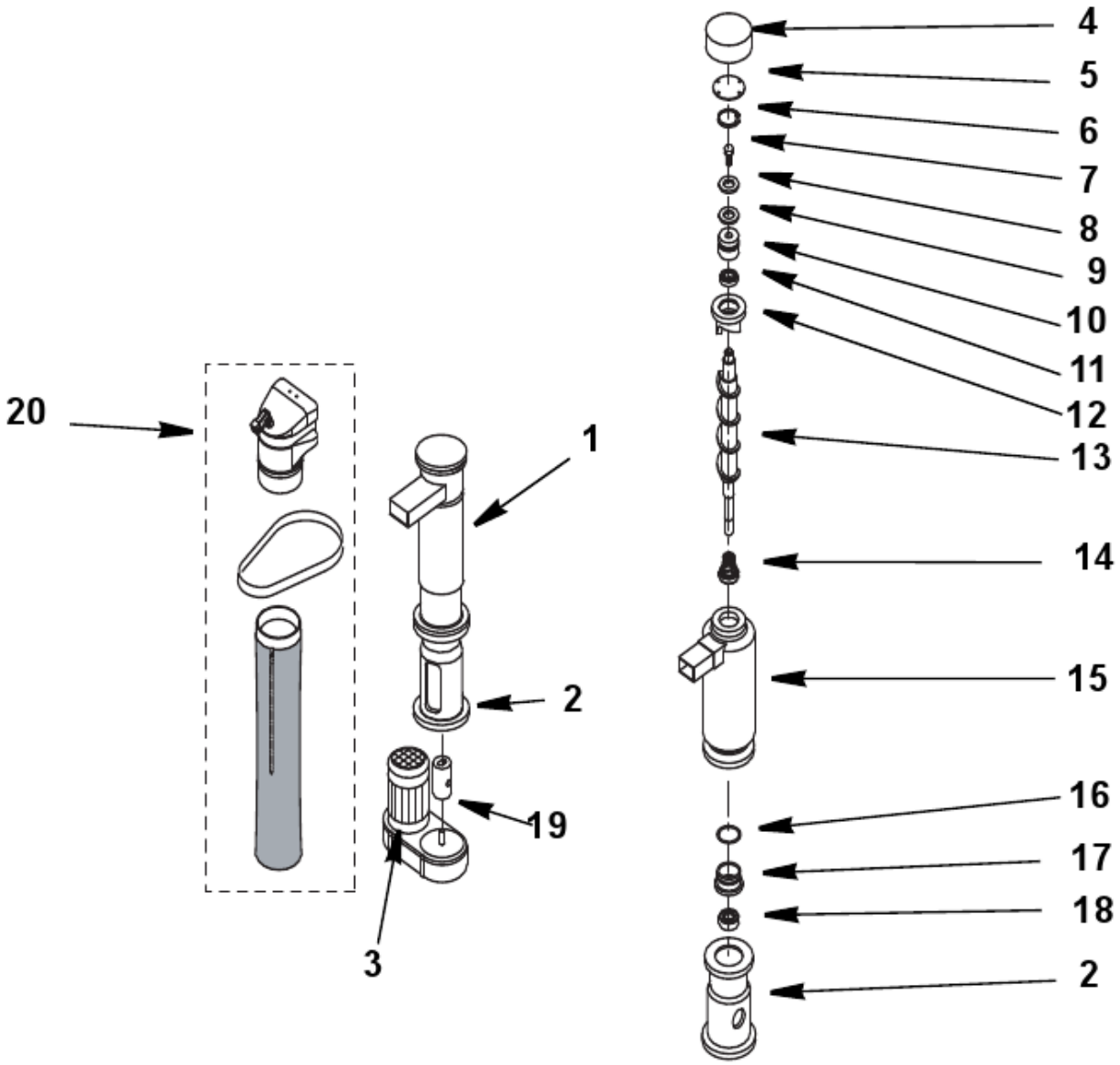

RFS0300 EVAPORATOR ASSEMBLY

#	PART #	DESCRIPTION	QTY	Note
1	000005685	Evaporator Assembly		
2	000005693	Evaporator Foundation		
3		Gear Motor Assembly		
3a	000005698	Gearmotor Assembly - 115V/60 Hz/1 Ph		
3b	000005697	Gearmotor Assembly - 208-230V/50-60 Hz/1 Ph		
4	000005734	Insulating Cap		
5	000005608	Bearing Cap		
6	000005757	Snap Ring		
7	000005599	Auger Bolt		
8	000005609	Bearing Shim		
9	000005650	Self Lubricating Disc		
10	000005607	Upper Bearing		
11	000005735	Upper O-ring		
12	000005647	Cutter Head		
13	000005598	Auger		
14	000005778	Water Seal		
15	000005681	Evaporator		
16	000005583	O-ring Gasket		
17	000005782	Water Seal Retainer		
18	000005605	Lower Bearing		
19	000005642	Coupling		
20	000011625	Ice Chute with Bulb Holder and Bin Thermostat		
20	000011621	Ice Chute with Bulb Holder		
20	000007906	Ice Exhaust with Microswitch		
20	000011623	Bin Thermostat		[1]
20	000007910	Cross Bar		
20	000007907	Locking Strip		
20	000007908	Bulb Holder		[2]
20	000007911	Ice Chute Assembly		[2]
20	000007909	Ice Outlet Pipe Assembly		[2]

PART NOTES:

[1] - Before Serial Number M05994822012 must order 000011625 (bin thermostat AND ice chute with bulb holder).

[2] - Discontinued

RFS0300 EVAPORATOR COMPARTMENT

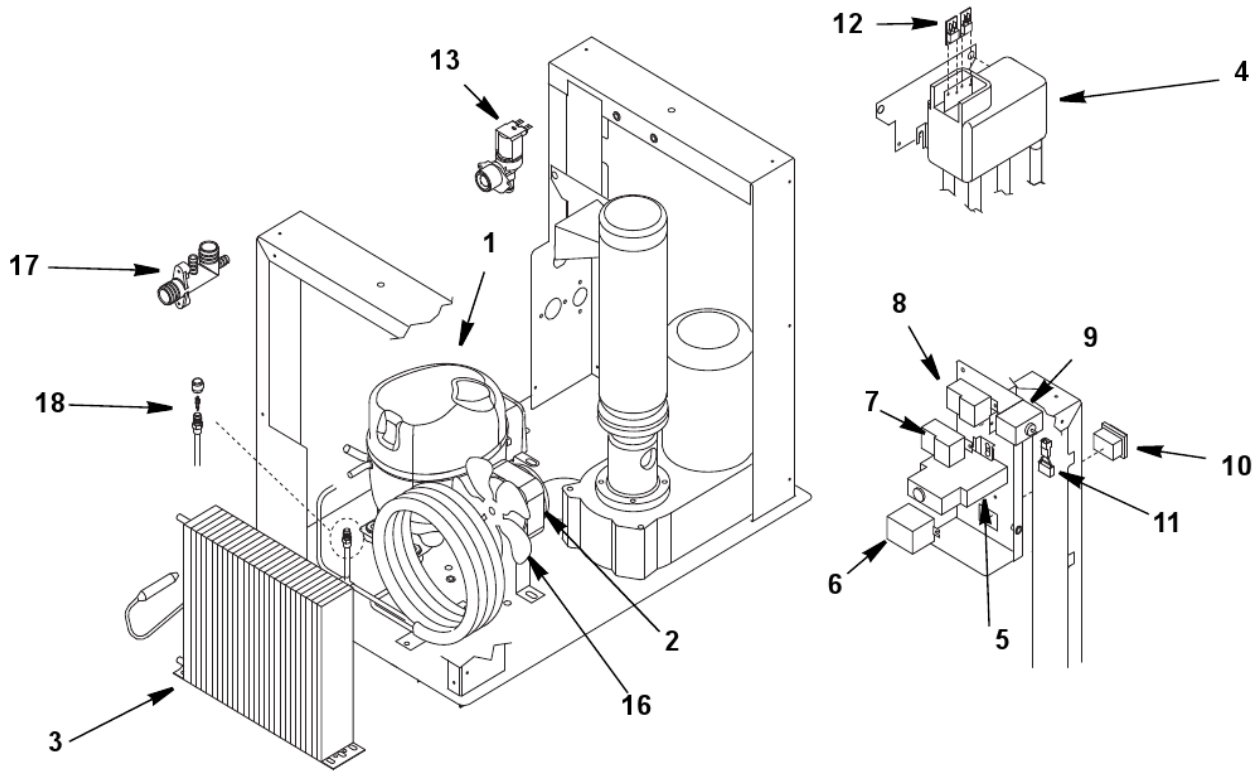

RFS0300 EVAPORATOR COMPARTMENT

#	PART #	DESCRIPTION	QTY	Note
1		Compressor		
1a	000008833	Compressor - 115V/60 Hz/1 Ph		
1b	000005627	Compressor - 208-230V/50-60 Hz/1 Ph		
2		Condenser Fan Motor		
2a	000008835	Condenser Fan Motor - 115V/60 Hz/1 Ph		
2b	000009256	Condenser Fan Motor - 208-230V/50-60 Hz/1 Ph		
3	000005632	Air Condenser		
4	000008834	Water Reservoir Assembly		[1]
4a	000005747	Water Reservoir Only		
5	000012012	Electronic Compressor Delay Timer		
6		Compressor Relay		
6a	000005746	Compressor Delay Relay - 115V/60 Hz/1 Ph		
6b	000005745	Compressor Delay Relay - 230V/50-60 Hz/1 Ph		
7	000005768	Evaporator Safety Thermostat		
8	000005765	Bin Thermostat		[2]
9		Fan Cycle Control		
9a	000006060	Fan Cycle Control - 115-230V/50-60 Hz/1 Ph		
9b	000006191	Fan Cycle Control - 208-230V/50-60 Hz/1 Ph		
10	000005763	ON/OFF Rocker Switch		
11		Electronic Noise Reducer		[3]
11a	000005680	Electronic Noise Reducer		[4]
11b	000005678	Electronic Noise Reducer		[5]
12	000005760	Float Microswitch (each)		
13		Water Inlet Valve		
13a	000006063	Water Inlet Valve - 115V/60 Hz/1 Ph		
13b	000005770	Water Inlet Valve - 220-230V/50-60 Hz/1 Ph		
14	000005674	Drier		
15	000008838	Expansion Valve		
16	000005686	Condenser Fan Blade		
17		Drain Manifold		
17a	000006162	Drain Manifold - 115V/60 Hz/1 Ph		
17b	000005673	Drain Manifold - 230V/50 Hz/1 Ph		
18		Access Valve		
18a	000006408	Fitting - Access Valve		
18b	000006409	Core - Access Valve		
18c	000006410	Cap - Access Valve		
19		Screws		
19a	000009040	Screw - M5 x 10TC		
19b	000009041	Screw - 3.9 x 13TC		
20		Backflow Preventer		
20a	000009971	Backflow Preventer 60 Hz - 3/8"		
20b	000009972	Backflow Preventer 50 Hz - 3/4"		

RFS0300 EVAPORATOR COMPARTMENT

#	PART #	DESCRIPTION	QTY	Note

PART NOTES:

[1] - Includes Hoses, Float & Two Microswitches
[2] - Discontinued
[3] - Radio Interference Filter
[4] - 230V/60 Hz
[5] - 230V/50 Hz

RFS0300 PANELS

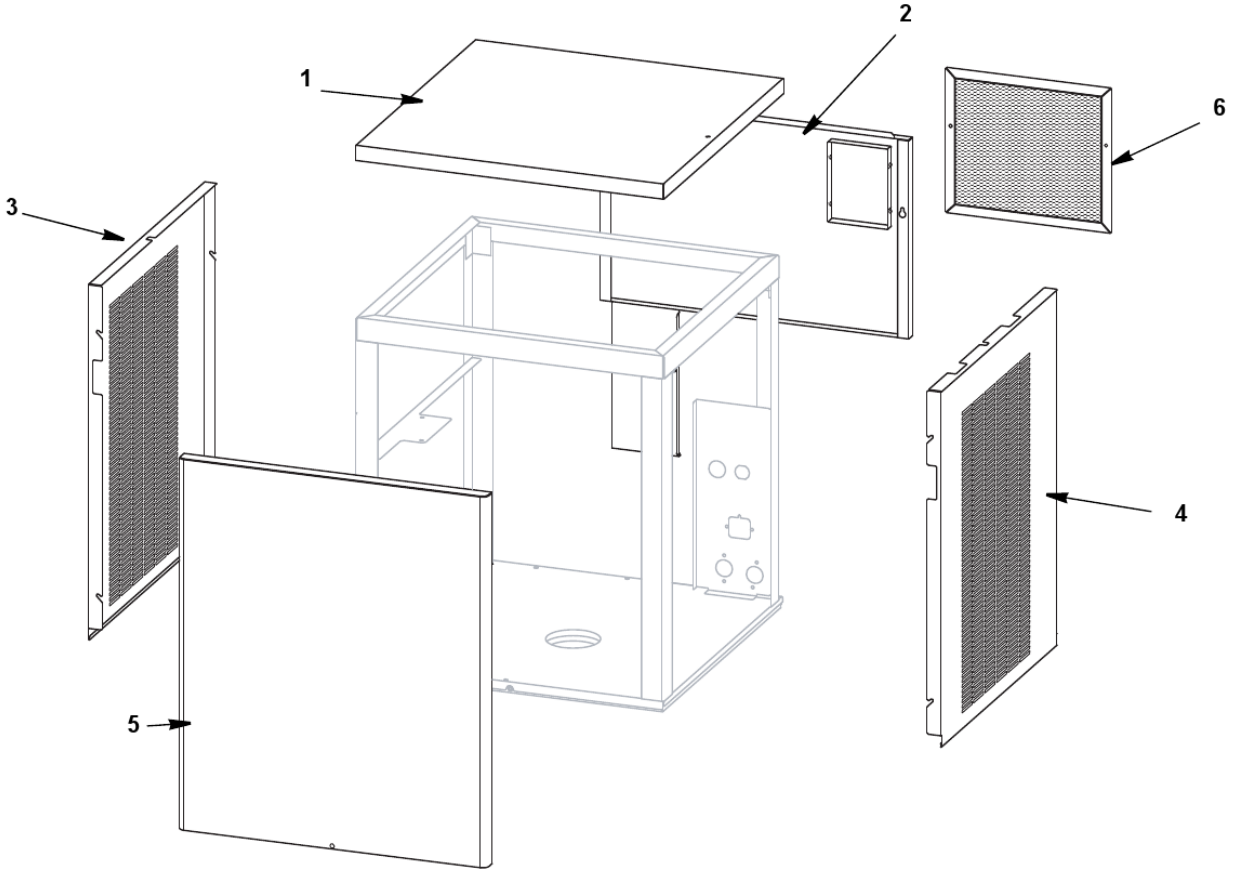

RFS0300 PANELS

#	PART #	DESCRIPTION	QTY	Note
1	000008759	Top Panel		
2		Back Panel		
		60 Hz		
2a	000008836	Back Panel - Air-cooled or Water-cooled		
		50 Hz		
2b	000009255	Back Panel - Air-cooled		
2c	000009104	Back Panel - Water-cooled		
3	000008768	Left Side Panel		
4	000008757	Right Side Panel		
5	000008755	Front Panel Assembly		
6	000008837	Air Filter		
7	000010432	Cartoning		