Manitowoc

Foodservice

Parts Manual

For more Parts Information:
https://manitowocfsg.sysonline.com/Default.aspx

TABLE OF CONTENTS

Manitowoc Foodservice [Updated: Sep. 30, 2013]
Manitowoc - Ice & Related
Parts Catalog
Ice Machine
RNS Series
RNS Model - UnderCounter
RNS0244
RNS0244 Evaporator Assembly 1
RNS0244 Evaporator Compartment 3
RNS0244 Panels 6

RNS0244 EVAPORATOR ASSEMBLY

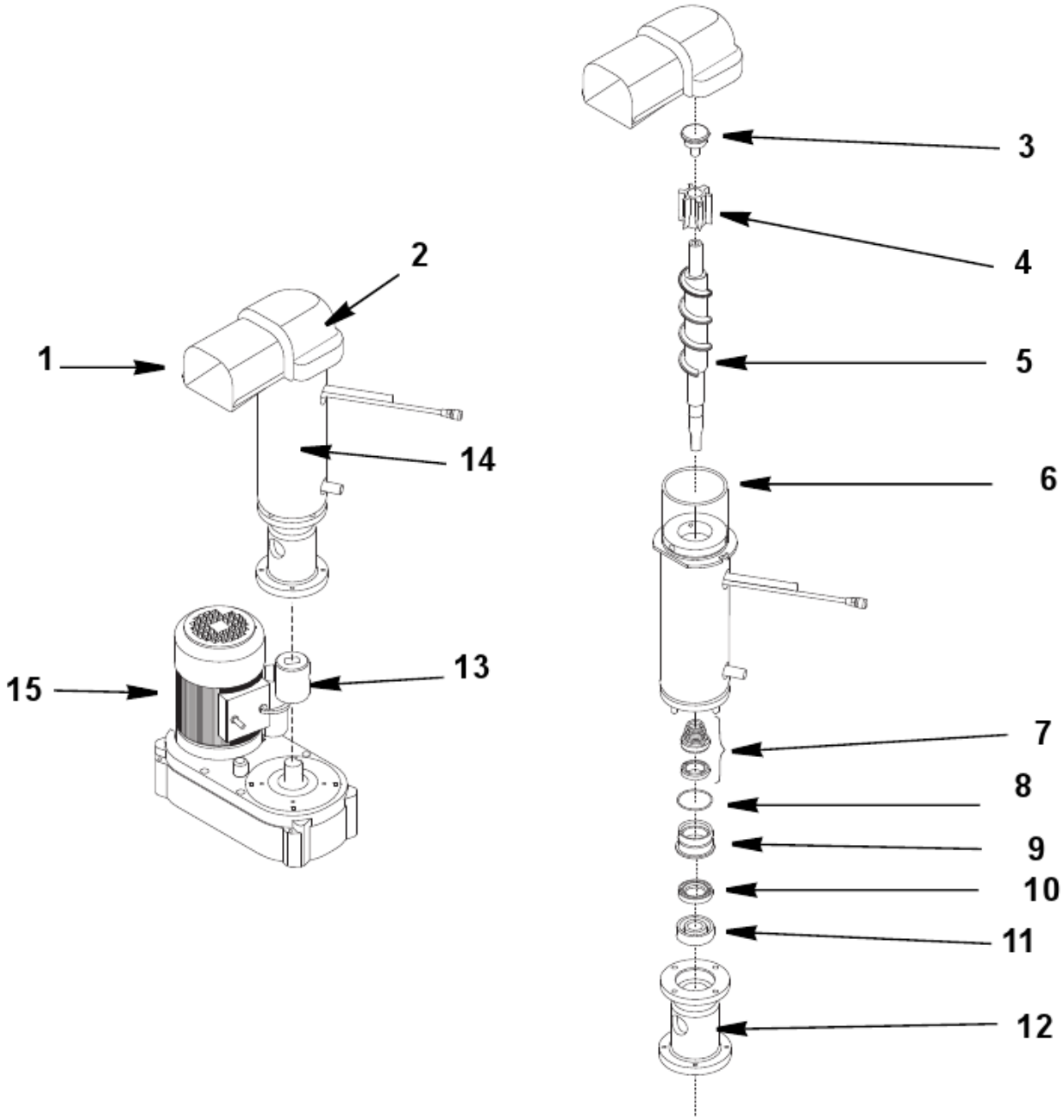

RNS0244 EVAPORATOR ASSEMBLY

#	PART #	DESCRIPTION	QTY	Note
1	000008952	Ice Exhaust		[1]
2	000008881	Insulating Cap		[1]
3	000008889	Ice Breaker		
4	000009156	Extruder with Bearings Assembly		
5	000009157	Auger		
6	000008900	O-ring Gasket		
7	000006426	Water Seal		
8	000005583	O-ring Gasket		
9	000005782	Water Seal Retainer		
10	000008938	Seal Ring		
11	000008898	Bearing		
12	000008897	Foundation		
13	000008967	Joint		
14		Evapoator Assembly - See Note for Serial Break		
14a	000012038	Evaporator Assembly		[2]
14b	000009159	Evaporator Assembly		[3]
15		Gear Motor Assembly		
15a	000011126	Gearmotor Assembly - 115V/60 Hz/1 Ph		
15b	000005697	Gearmotor Assembly - 208-230V/50-60 Hz/1 Ph		

PART NOTES:

[1] - Before Serial Number M05891402012
[2] - After Serial Number M05891412012
[3] - Before Serial Number M05891412012

RNS0244 EVAPORATOR COMPARTMENT

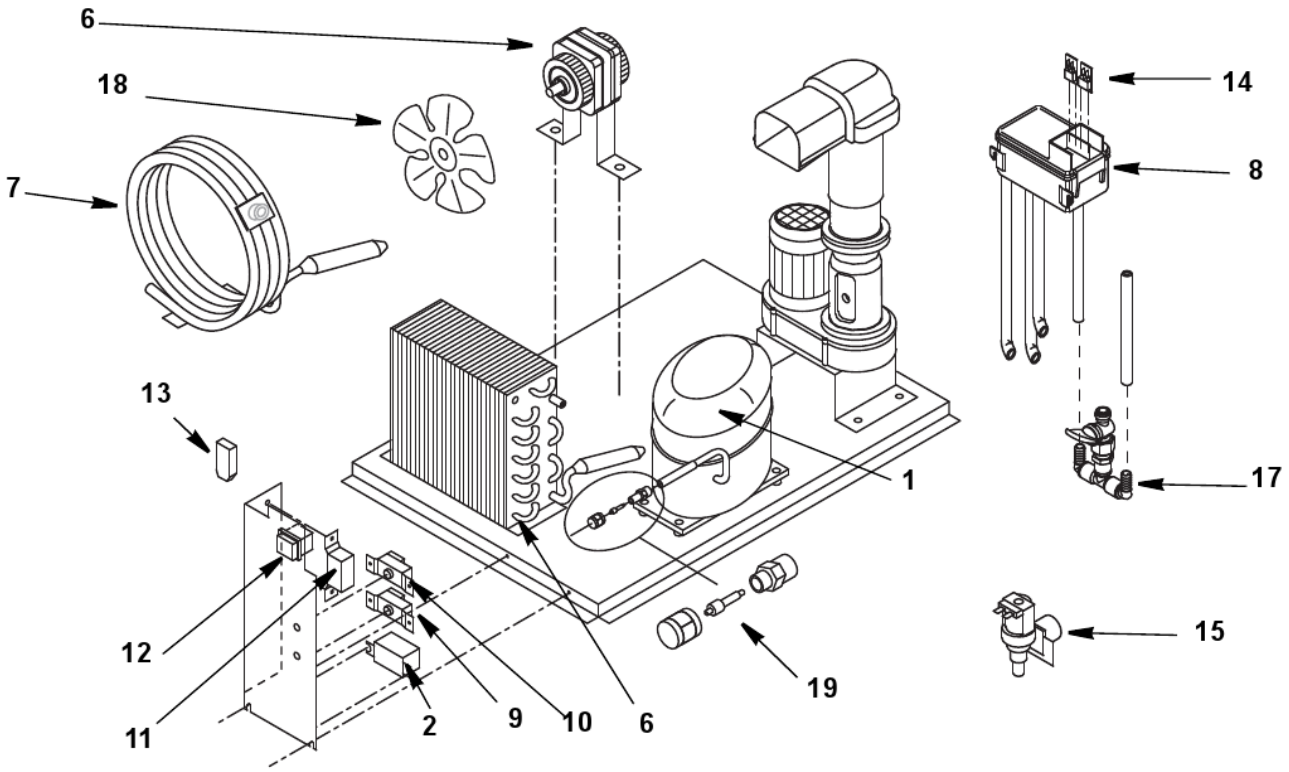

RNS0244 EVAPORATOR COMPARTMENT

#	PART #	DESCRIPTION	QTY	Note
1		Compressor		
1a	000005615	Compressor - 115V/60 Hz/1 Ph		
1b	000005614	Compressor - 230V/50 Hz/1 Ph		
2		Compressor Delay Relay		
2a	000005746	Compressor Delay Relay - 115V/60 Hz/1 Ph		
2b	000005745	Compressor Delay Relay - 230V/50-60 Hz/1 Ph		
3		Compressor Start Relay		
3a	000008384	Start Relay - 115V/60 Hz/1 Ph		
3b	000008383	Start Relay - 230V/50 Hz/1 Ph		
4		Start Capacitor		
4a	000008426	Start Capacitor - 115V/60 Hz/1 Ph		
5		Condenser Fan Motor		
5a	000005578	Fan Motor - 115V/60 Hz/1 Ph		
5b	000005574	Fan Motor - 208-230V/50-60 Hz/1 Ph		
6	000005629	Air Condenser		
7	000005635	Water-cooled Condenser		
8	000010060	Water Reservoir Assembly		[1]
8a	000005747	Water Reservoir Only		
9	000005768	Evaporator Safety Thermostat		
10	000005766	Bin Thermostat		
11		Fan Cycle Control - See Note for Usage		
11a	000006060	Fan Cycle Control - 115-230V/50-60 Hz/1 Ph		[2]
11b	000006191	Fan Cycle Control - 208-230V/50-60 Hz/1 Ph		[3]
12	000006069	ON/OFF Rocker Switch		
13	000005680	Electronic Noise Reducer		
14	000005760	Float Microswitch (each)		
15		Water Inlet Valve		
15a	000006063	Water Inlet Valve - 115V/60 Hz/1 Ph		
15b	000005770	Water Inlet Valve - 220-230V/50-60 Hz/1 Ph		
16	000005674	Drier		
17	000009160	Evaporator Drain Tap		[4]
18		Condenser Fan Blade		
18a	000005687	Condenser Fan Blade - 60 Hz		[5]
18b	000005688	Condenser Fan Blade - 50 Hz		[5]
18c	000005573	Condenser Fan Blade - Water-cooled		
19		Access Valve		
19a	000006409	Core - Access Valve		
19b	000006408	Fitting - Access Valve		
19c	000006410	Cap - Access Valve		
20		Screws		
20a	000009040	Screw - M5 x 10TC		
20b	000009041	Screw - 3.9 x 13TC		

RNS0244 EVAPORATOR COMPARTMENT

#	PART #	DESCRIPTION	QTY	Note

PART NOTES:

[1] - Includes Hoses, Float & Two Microswitches
[2] - 115V
[3] - 230V
[4] - when used
[5] - Air-cooled

RNS0244 PANELS

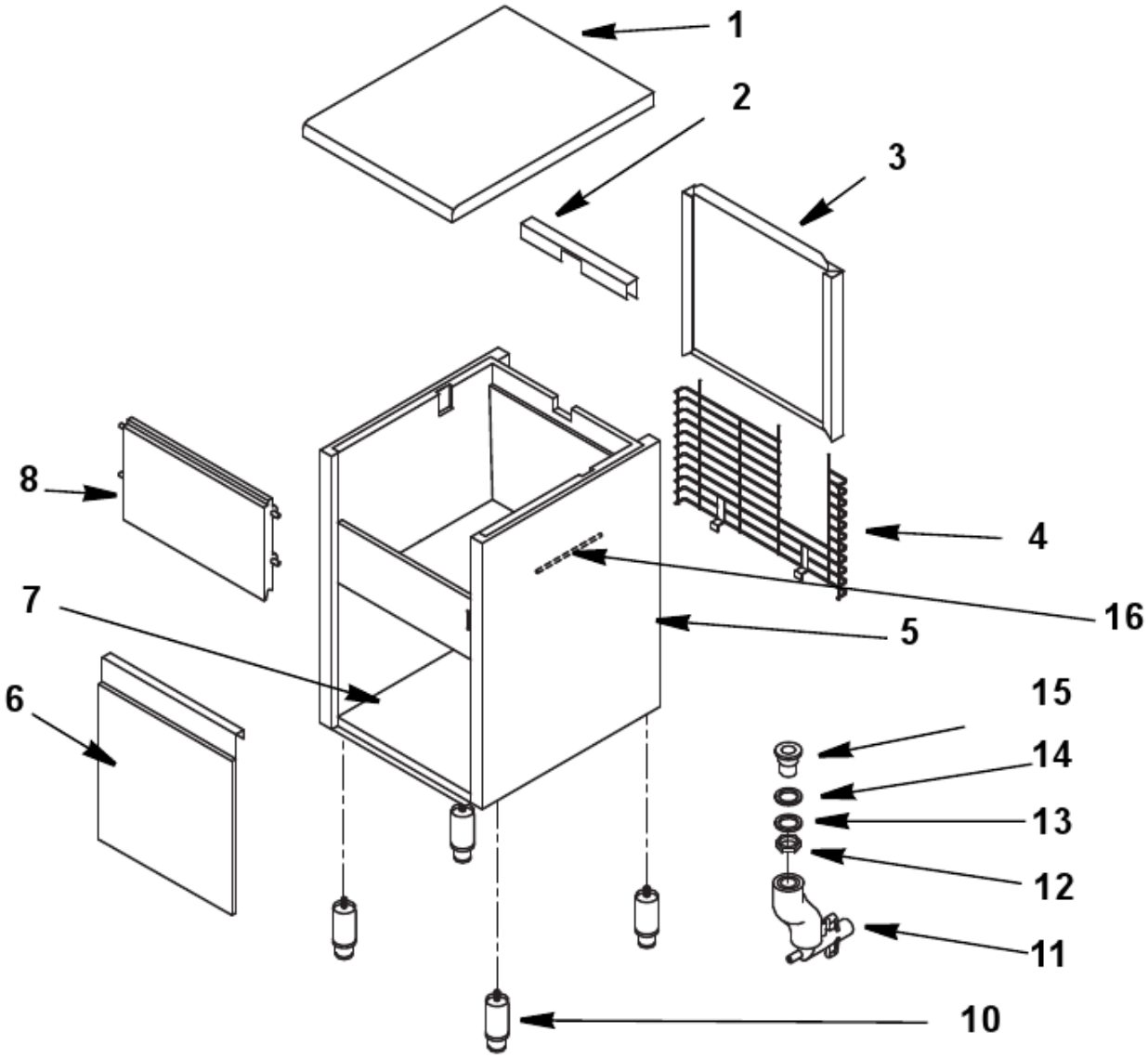

RNS0244 PANELS

#	PART #	DESCRIPTION	QTY	Note
1	000005741	Top Panel		
2		Ice Spout Cover Bracket - See Note for Serial Break		
2a	000008948	Ice Spout Cover Bracket		[1]
2b	000012042	Ice Spout Cover Bracket		[2]
3	000005665	Back Panel Assembly		
4	000005700	Back Grill		
5		Foamed Cabinet Assembly		
		Air-cooled		
5a	000008965	Foamed Cabinet Assembly 115/60/1		
5b	000008955	Foamed Cabinet Assembly 220/60/1 or 230/50/1		
		Water-cooled		
5c	000008966	Foamed Cabinet Assembly 115/60/1		
5d	000008956	Foamed Cabinet Assembly 220/60/1 or 230/50/1		
6	000005585	Front Grill Panel		
7	000005601	Base Plate		
8	000005659	Door Assembly		
9	000005783	Plastic Legs		
10	000005663	Adjustable Stainless Steel Legs		
11		Drain Manifold		
11a	000006162	Drain Manifold - 115V/60 Hz/1 Ph		
11b	000005671	Drain Manifold - 208-230V/50-60 Hz/1 Ph		
12	000005581	Bin Drain Nut		
13	000005695	Bin Drain Gasket Bottom		
14	000005696	Bin Drain Gasket Top		
15	000005692	Bin Drain Fitting		
16	000006075	Bin Bulb Holder		
17	000008684	Cartoning		

PART NOTES:

[1] - Before Serial Number M05891402012
[2] - After Serial Number M05891412012