Attention Installers

Undercounter Installation Instructions (High Temp.)

0512242 REV C

All plumbing and electrical connections must be made by qualified installers in accordance with all local plumbing and electrical codes.

Plumbing connections must be made BEFORE power is connected to the dishwasher. Damage to the water heaters will result if power is turned on without adequate water supply.

All plumbing and electrical connections must be positioned to allow the unit to be removable for service and cleaning.

1 Location

- Place dishwasher in permanant location
- Level dishwasher with 4 leveling feet
- Level side to side and front to back
- Remove front Panel

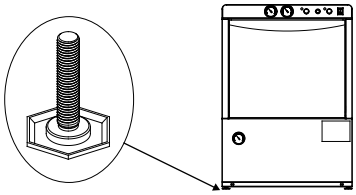

2 Hot Water Supply

- Min. 140°F (60°C) for 40° rise @ 20 PSI (138kPa) min. flow pressure
- Min. 110°F (43°C) for 70° rise @ 20 PSI (138kPa) min. flow pressure
- Min 1/2" water supply line

Hot Water Connection

- 6 ft. fill hose supplied
- 3/4" garden hose fitting

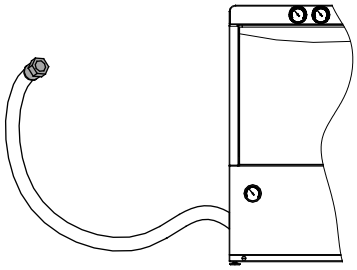

3 Drain Connection

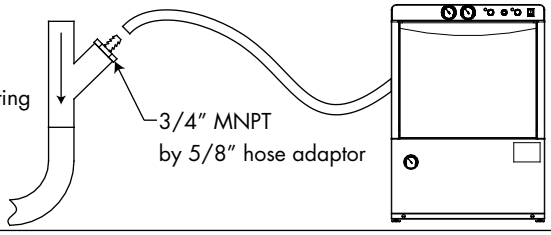

- 4 ft. clear braided drain hose supplied

* Maximum drain height: 3 ft.

4 Electrical Connections

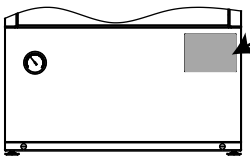

Check data plate for electrical power requirements

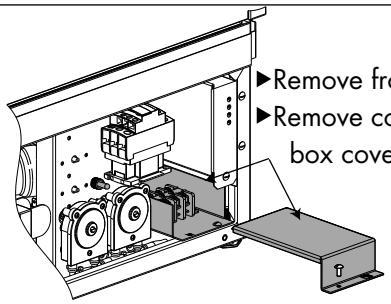

- Remove front panel
- Remove connection box cover

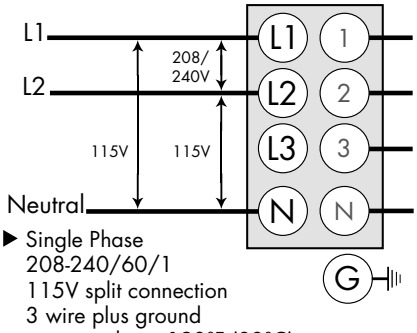

- Single Phase 208-240/60/1 115V split connection 3 wire plus ground wire rated min 190°F (88°C)

5 Fill Booster Tank

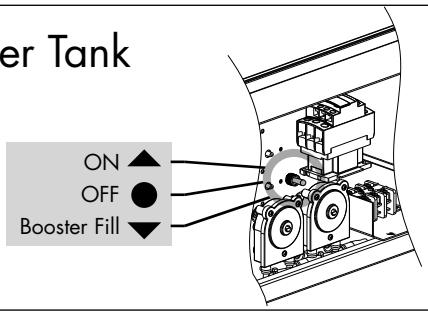

- Booster Service Switch is located on the left side of chemical pump bracket
- Push Service Switch to "Booster Fill" position and hold until water enters wash tank
- Push Service Swtich to the "On" position.
- Replace front panel. Installation is complete!

Attention Installers

Undercounter Installation Instructions (Low Temp.)

0512242 REV C

All plumbing and electrical connections must be made by qualified installers in accordance with all local plumbing and electrical codes.

Plumbing connections must be made BEFORE power is connected to the dishwasher. Damage to the water heaters will result if power is turned on without adequate water supply.

All plumbing and electrical connections must be positioned to allow the unit to be removable for service and cleaning.

1 Location

- Place dishwasher in permanant location
- Level dishwasher with 4 leveling feet
- Level side to side and front to back
- Remove front Panel

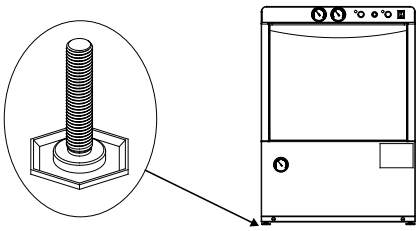

2 Hot Water Supply

- Min. 140°F (60°C) @ 20 PSI (138kPa) min. flow pressure
- Min 1/2" water supply line

Hot Water Connection

- 6 ft. fill hose supplied
- 3/4" garden hose fitting

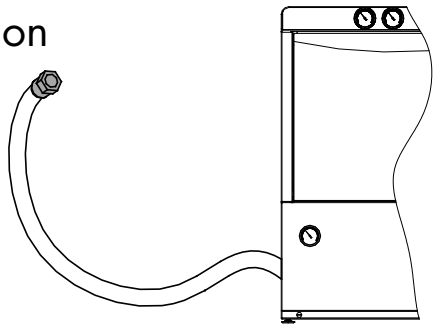

3 Drain Connection

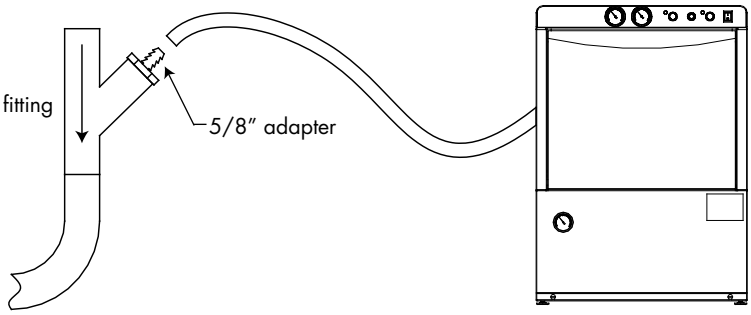

- 4 ft. clear braided drain hose supplied

* Maximum drain height: 3 ft.

4 Electrical Connections

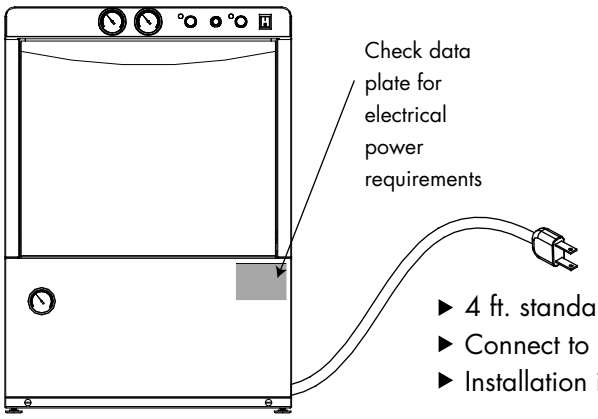

- 4 ft. standard power cord supplied.
- Connect to 15 amp/120 volt receptacle.
- Installation is complete!