Tall Hood-type Series Dishwasher

Installation/Operation Manual with Service Replacement Parts

Standard Model:
Hot water sanitizing machine w/fresh water rinse and built-in stainless steel electric booster

Also available with:
Direct Vent Option or
Condensate Removal Option

Machine Serial No.

LISTED

Issue Date: 12.05.13

Manual P/N *115105 rev. E*

For machines beginning with S/N D120810203 and above

3765 Champion Boulevard
Winston-Salem, NC 27105
336/661-1556 Fax: 336/661-1660
Toll-free: 800/ 858-4477

2674 N. Service Road, Jordan Station
Ontario, Canada L0R 1S0
905/562-4195 Fax: 905/562-4618
Toll-free: 800/ 263-5798

Printed in the USA

For future reference, record your dishwasher information in the box below.

Model Number_____ Serial Number_____

Voltage_____Hertz_____ Phase_____

Service Agent _____ Tel:_____

Parts Distributor _____ Tel:_____

National Service Department

In Canada:
Toll-free: 800/ 263-5798
Tel: 905/ 562-4195
Fax: 905/ 562-4618
email: service@moyerdiebellimited.com

In the USA:
Toll-free: 800/ 858-4477
Tel: 336/ 661-1556
Fax: 336/ 661-1660
email: service@championindustries.com

ATTENTION:

The model no., serial no., voltage, Hz and phase are needed to identify your machine and to answer questions.

The machine data plate is located on the front corner of the lower panel

Please have this information ready if you call for service assistance.

The USGBC and the CaGBC Member Logos are trademarks owned by the U.S. Green Building Council and The Canadian Green Building Council, respectively, and are used by permission. The logos signify only that Champion Industries, and Moyer Diebel are USGBC and a CaGBC members; USGBC and CaGBC do not review, certify nor endorse the products or services offered by its members.

COPYRIGHT © 2013 All rights reserved Printed in the USA

REGISTER YOUR PRODUCT ONLINE

Make sure you are connected to the internet then enter the address below.

In the U.S.A

http://www.championindustries.com/register

http://www.moyerdiebel.com/register

In Canada

http://www.championindustries.com/canada/register

PRODUCT REGISTRATION BY FAX

COMPLETE THIS FORM AND FAX TO:

(336) 661-1660 in the USA

1-(800) 204-0109 in Canada

PRODUCT REGISTRATION CARD

Model	Serial #

Date of Installation: ___/___ /____

Company Name: _____

Address: _____ _____ _____
(Street) Province Postal Code

Telephone #: ( ) _____ --- _____

Contact: _____

Installation Company: _____

Address: _____

Telephone #: _____

Contact: _____

FAILURE TO REGISTER YOUR PRODUCT MAY VOID YOUR WARRANTY

IMPORTANT IMPORTANT

Revision History

A revision might be a part number change, a new instruction, or other information that was not available at print time. We reserve the right to make changes to these instructions without notice and without incurring any liability by making the changes. Equipment owners may request a revised manual, at no charge, by calling 1 (800) 858-4477 in the USA or by calling 1 (800) 263-5798 in Canada.

Revision Date	Revised Pages	Serial Number Effectivity	Revision Description
1.31.13	All	D120810203	Released Second Edition
1.17.13	All	D120710098	1st 480V machine released
7.19.13	50-51	D120710098	Changed rinse arm to P/N 115222
9.20.13	6	D130610931	Updated corner conversion instructions
	54-55	D130610931	Updated track assy. parts
11.6.13	33	D130610931	Added 208-240V/60/3 motor
	105-108	D130610931	Revised motor circuits on schematics
12.5.13	All	All	Released Third Edition, DH5000T, MDHH-D version

LIMITED WARRANTY

Champion Industries Inc. and Moyer Diebel (herein referred to as "The Companies"), 3765 Champion Blvd., Winston-Salem, North Carolina 27105, and P.O. Box 301, 2674 N. Service Road, Jordan Station, Canada, L0R 1S0, warrants machines, and parts, as set out below.

Warranty of Machines: The Companies warrant all new machines of its manufacture bearing the name "Champion or Moyer Diebel" and installed within the United States and Canada to be free from defects in material and workmanship for a period of one (1) year after the date of installation or fifteen (15) months after the date of shipment by The Companies, whichever occurs first. [See below for special provisions relating to glasswashers.] Warranty registration must be submitted to The Companies within ten (10) days after installation either online on the Champion Industries website (http://www.championindustries.com/register), or the Moyer Diebel website (http://www.moyerdiebel.com/register in the USA or http://www.championindustries.com/canada/register in Canada or by fax on the form provided at the front of this manual. The Companies will not assume any responsibility for extra costs for installation in any area where there are jurisdictional problems with local trades or unions.

If a defect in workmanship or material is found to exist within the warranty period, The Companies, at their election, will either repair or replace the defective machine or accept return of the machine for full credit; provided; however, as to glasswashers, The Companies' obligation with respect to labor associated with any repairs shall end (a) 120 days after shipment, or (b) 90 days after installation, whichever occurs first. In the event that The Companies elect to repair, the labor and work to be performed in connection with the warranty shall be done during regular working hours by a Champion or Moyer Diebel authorized service technician. Defective parts become the property of The Companies. Use of replacement parts not authorized by The Companies will relieve The Companies of all further liability in connection with its warranty. In no event will The Companies' warranty obligation exceed The Companies' charge for the machine. The following are not covered by The Companies' warranty:

a. Lighting of gas pilots or burners.
b. Cleaning of gas lines.
c. Replacement of fuses or resetting of overload breakers.
d. Adjustment of thermostats.
e. Adjustment of clutches.
f. Opening or closing of utility supply valves or switching of electrical supply current.
g. Cleaning of valves, strainers, screens, nozzles, or spray pipes.
h. Performance of regular maintenance and cleaning as outlined in operator's guide.
i. Damages resulting from water conditions, accidents, alterations, improper use, abuse, tampering, improper installation, or failure to follow maintenance and operation procedures.
j. Wear on Pulper cutter blocks, pulse vanes, and auger brush.

Examples of the defects not covered by warranty include, but are not limited to: (1) Damage to the exterior or interior finish as a result of the above, (2) Use with utility service other than that designated on the rating plate, (3) Improper connection to utility service, (4) Inadequate or excessive water pressure, (5) Corrosion from chemicals dispensed in excess of recommended concentrations, (6) Failure of electrical components due to connection of chemical dispensing equipment installed by others, (7) Leaks or damage resulting from such leaks caused by the installer, including those at machine table connections or by connection of chemical dispensing equipment installed by others, (8) Failure to comply with local building codes, (9) Damage caused by labor dispute.

Warranty of Parts: The Companies warrant all new machine parts produced or authorized by The Companies to be free from defects in material and workmanship for a period of 90 days from date of invoice. If any defect in material and workmanship is found to exist within the warranty period The Companies will replace the defective part without charge.

DISCLAIMER OF WARRANTIES AND LIMITATIONS OF LIABILITY. THE COMPANIES' WARRANTY IS ONLY TO THE EXTENT REFLECTED ABOVE. THE COMPANIES' MAKE NO OTHER WARRANTIES, EXPRESS OR IMPLIED, INCLUDING, BUT NOT LIMITED, TO ANY WARRANTY OF MERCHANTABILITY, OR FITNESS OF PURPOSE. THE COMPANIES SHALL NOT BE LIABLE FOR INCIDENTAL OR CONSEQUENTIAL DAMAGES. THE REMEDIES SET OUT ABOVE ARE THE EXCLUSIVE REMEDIES FOR ANY DEFECTS FOUND TO EXIST IN THE COMPANIES' DISHWASHING MACHINES AND THE COMPANIES' PARTS, AND ALL OTHER REMEDIES ARE EXCLUDED, INCLUDING ANY LIABILITY FOR INCIDENTALS OR CONSEQUENTIAL DAMAGES.

The Companies do not authorize any other person, including persons who deal in Champion or Moyer Diebel dishwashing machines to change this warranty or create any other obligation in connection with Champion or Moyer Diebel dishwashing machines.

Table of Contents
Tall Hood-type Series Dishwasher

Revision History ..... *i*
Limited Warranty ..... *ii*
Model Description ..... *iv*

Installation *1*

Receiving *1*
Placement *1*
Installing Condensate Removal or Direct Vent Options *2*
Converting Straight-through Operation to Corner Operation *3*
Electrical Connections *7*
Water Connections *12*
Drain Connection *13*
Standard Vent Fan Control *13*
Chemical Dispensing Provisions *14*

Initial Start-up *15*

Initial Start-up Check List *15*

Operation *16*

Control Panel Description *16*
Digital Temperature Display Description *17*
Temperature Display Error Codes *17*
Standard Wash Cycle Operation *18*
Automatic Drain Cycle *21*
Heavy Duty Wash Cycle Operation *22*
Rinse Sentry Operation Mode *25*

Cleaning and Maintenance *26*

Cleaning *26*
De-liming *28*
Maintenance *29*
Troubleshooting *30*

Service Replacement Parts *31*
Temperature Display Adjustment *(For Service Technicians Only)* *72*
Direct Vent Option Installation Instructions *79*
Condensate Removal Option Installation Instructions *91*
Hot Water Coil Installation/Grundfoss Pump Air Purge Instructions *104*
Time Cycle Charts *107*
Electrical Schematics *109*
P/N 900958, Control Box Wall Mount Kit *113*

Model Description

Tall Hood-Type Series Dishwashers

High temperature hot water sanitizing dishwasher with
built-in 40-70°F/22-82°C rise booster heater.
208-240V/60/1 & 3, 460-480V/60/3
Field convertible for straight-through or corner operation
Self-draining pump
Automatic start
Fresh water rinse
Standard Cycle: 60 second or 90 second total cycle time
Heavy Duty Cycle: 4 minute or 6 minute total cycle time
Rinse sentry
Automatic drain valve

Optional Equipment *(consult factory)*

Direct Vent System
Condensate Removal System
Additional Flat-bottom Dish racks (P/N 101273)
Additional Peg Dish racks (P/N 101285)

Receiving

1. Inspect the outside of the dishwasher carton for signs of damage.
2. Remove the carton and inspect the dishwasher for damage.
3. Check for any options or accessories that may have shipped with your dishwasher.
4. **Turn to the front of this manual and follow the instructions to register your product online or by fax.**

NOTE:
The installation of your dishwasher must be performed by qualified service personnel. Problems due to improper installation are not covered by the Warranty.

NOTE:
The installation of the dishwasher must comply with all local electrical, plumbing, health and safety codes or in the absence of local codes, installed in accordance with the applicable requirements in the National Electrical Code, NFPA 70, Canadian Electrical Code (CEC), Part 1, CSA C22.1; and the Standard for Ventilation Control and Fire Protection of Commercial Cooking Operations, NFPA 96.

Placement

CAUTION:
Be careful when lifting and moving the dishwasher to prevent damage to the machine.

1. Move the dishwasher near its permanent location.
2. Compare the installation site utility connections with the dishwasher utility connections and make sure they are the same.
3. The typical dishwasher load height is 33¾" [857mm].
4. For straight-through operation, provide 20" [508mm] clearance out from the front of the machine and 20" [508mm] out from the left-side of the machine by 27" [686mm] clearance above the floor for servicing.
5. For servicing a corner operation machine, provide 35" [889mm] clearance out from the front of the machine under the right-hand tabling, 35" [889mm] out from the left-hand of the machine under the left-hand tabling and 35" [889mm] out from the front of the machine. Provide 27" [686mm] clearance above the floor on all sides.

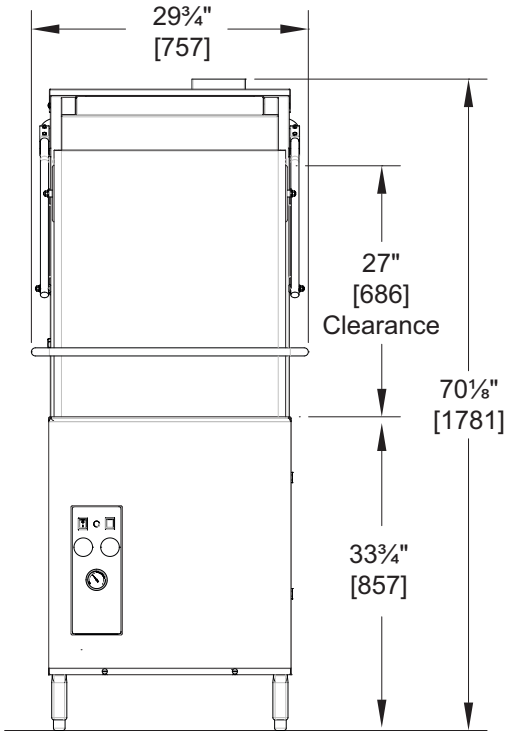

Standard dishwasher dimensions in inches and [millimeters].

Placement *(continued)*

6. Dishwashers are shipped from the factory for straight-through operation. Refer to page 4 to convert the dishwasher from straight-through to corner operation.

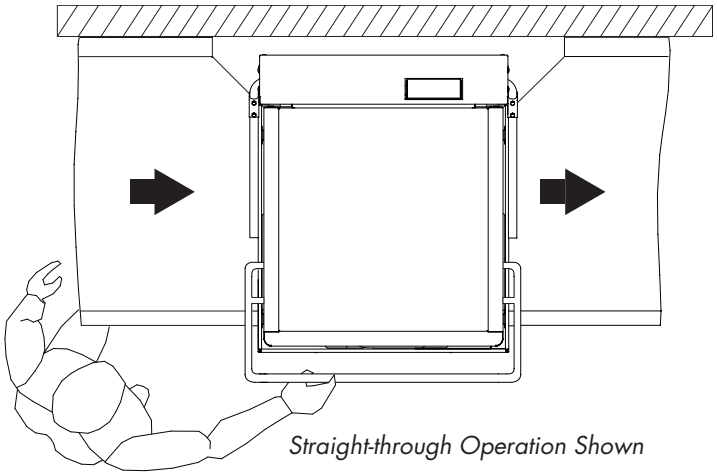

Straight-through Operation Shown

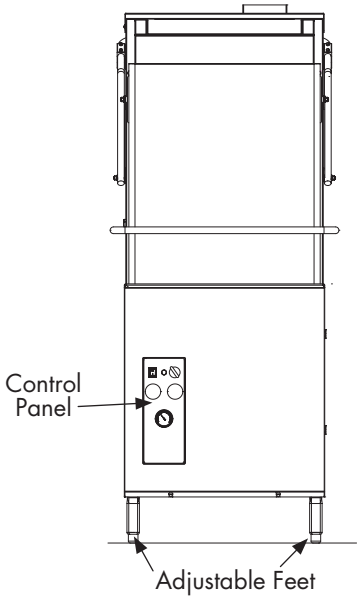

7. The dishwasher has 4 adjustable feet for leveling.
8. Level the dishwasher front-to-back and side-to-side.

Dish Table Connections

NOTE:
Dish tables should be securely fastened to the dishwasher after the dishwasher is permanently located and the utilities are connected.

1. Level the dishwasher and dish tables to the required height and fit the dish table flanges over the ends of the dishwasher tank. Refer to the illustration below.
2. Lift the dishwasher track assembly out of the dishwasher and set aside.
3. Remove the dishwasher side panels (front and side panel for corner operation).
4. Apply a NSF approved sealant between the table flanges and the wash tank.
5. Drill a minimum of two holes through the table flange and the inner wash tank.
6. Install stainless steel truss head screws or rust-proof rivets to secure the table and tank.
7. Reinstall the panels and track assembly.

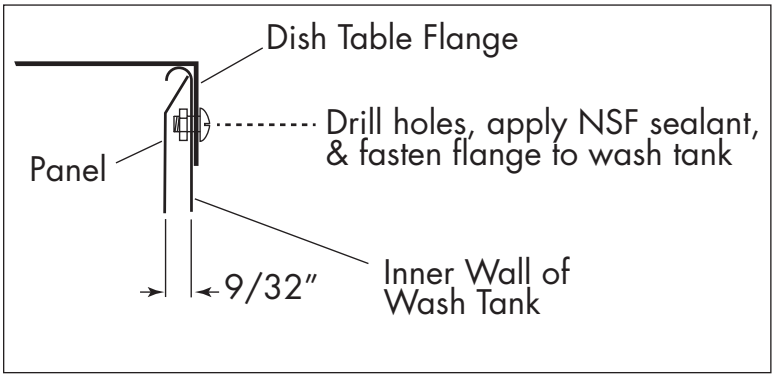

Installing Condensate Removal or Direct Vent Options

NOTE
Complete installation instructions are located at the end of this service manual.

The dishwasher may be equipped with either a Condensate Removal Option or a Direct Vent Option. These options ship separately from the dishwasher in their own containers. Separate instructions are also included attached to the front of the dishwasher. These instructions may be requested under the document part numbers listed below:

P/N 115107, Condensate Removal Option Installation Instructions

P/N 115109, Direct Vent Option Installation Instructions

Condensate Removal System Option

The condensate removal system removes dishwasher heat and water vapor at the end of the dishwashing cycle recovering the normally exhausted heat and transferring the recovered heat to the built-in booster heater which may eliminate the need for a dishwasher vent hood.

Direct Vent System Option

The direct vent system option removes dishwasher heat and water vapor directly into an exhaust vent which may eliminate the need for a dishwasher vent hood.

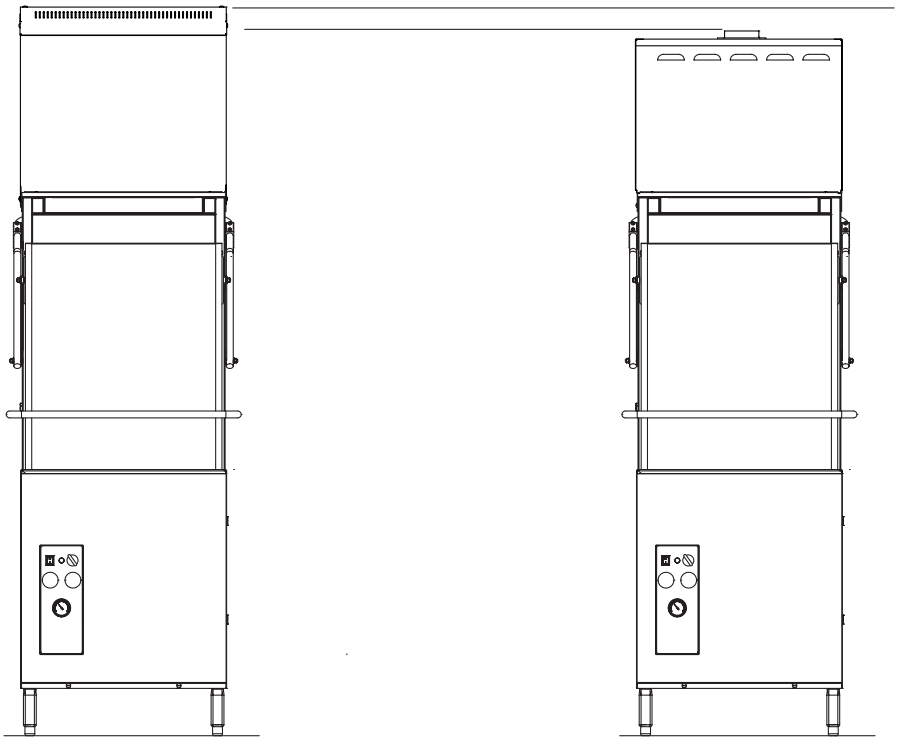

Condensate Removal Direct Vent

Converting Straight-through Operation to Corner Operation

! ATTENTION !
A straight-through machine can be converted to a corner configuration in the field.

Refer to the illustration below and on the next two pages to convert a straight-through operation machine to a corner operation machine.

To convert the dishwasher:

1. Place the dishwasher as shown below so the control panel faces into the room and is accessible to the operator.
2. Position the dishwasher so the machine and the dish tables align correctly according to the required positioning of the dish tables to the walls.
3. Make the utility connections as described in this manual and in accordance with all local codes and regulations.
4. Install the dish tables so the edge of each table fits over the inner wall of the dishwasher tank.
5. Secure the dish tables to the dishwasher
6. Seal each dish table joint with a food-grade sealant to prevent leaks.

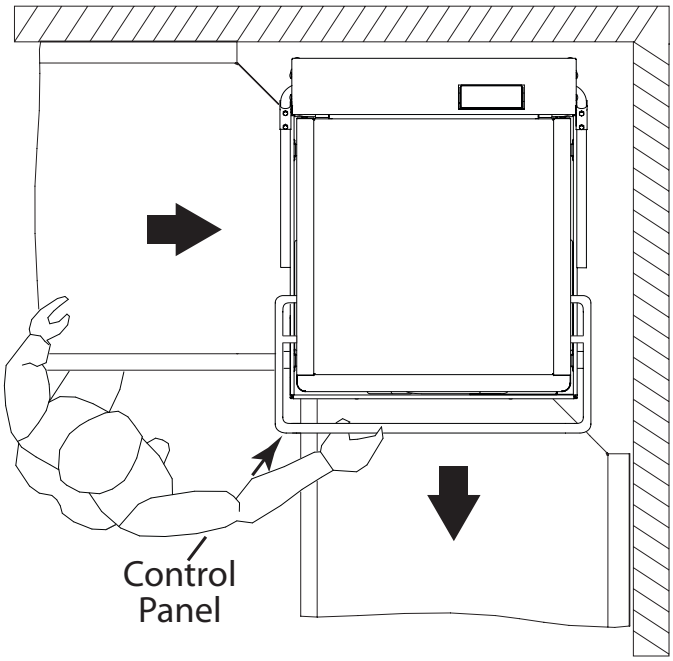

Corner Operation Shown

Converting Straight-through Operation to Corner Operation (continued)

! ATTENTION !
A straight-through machine can be converted to a corner configuration in the field.

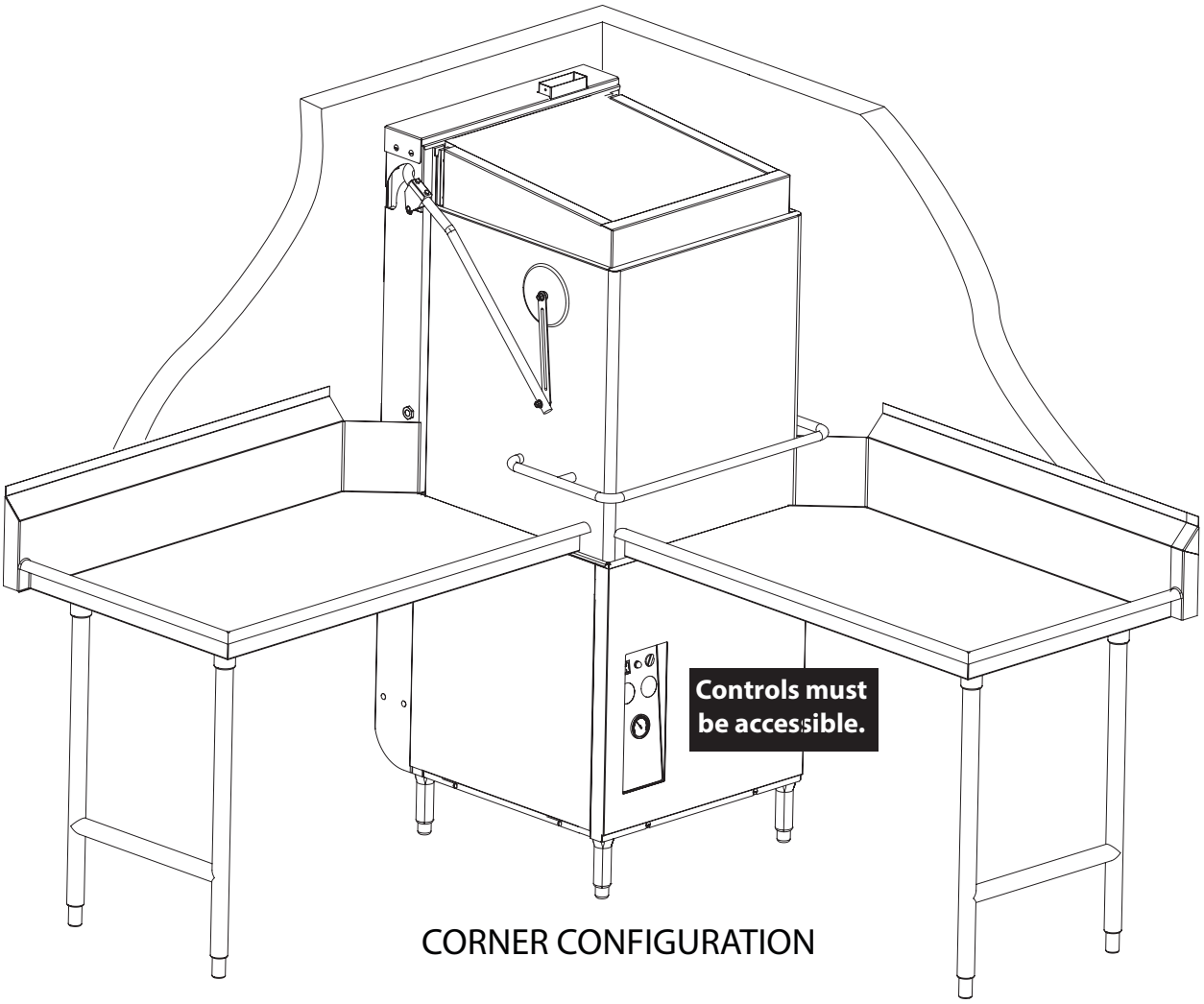

CORNER CONFIGURATION

Converting Straight-through Operation to Corner Operation

! ATTENTION !
The track assembly must be converted as shown below.

Step 1:

Open the hood and remove the track assembly (A) by pulling straight up and lifting the assembly out of the machine.

Step 2:

Rotate the track assembly 180° and reinstall it in the machine.

Step 3:

Note the location of the removal rack guide B1 after the track assembly has been rotated.

Step 4:

Remove the two truss-head screws holding the rack guide B1 in place. Save the fasteners.

Step 5:

Rotate the rack guide counter-clockwise 90° to its new position B2.

Step 6:

Using the fasteners saved in Step 4, secure the guide to the track assembly.

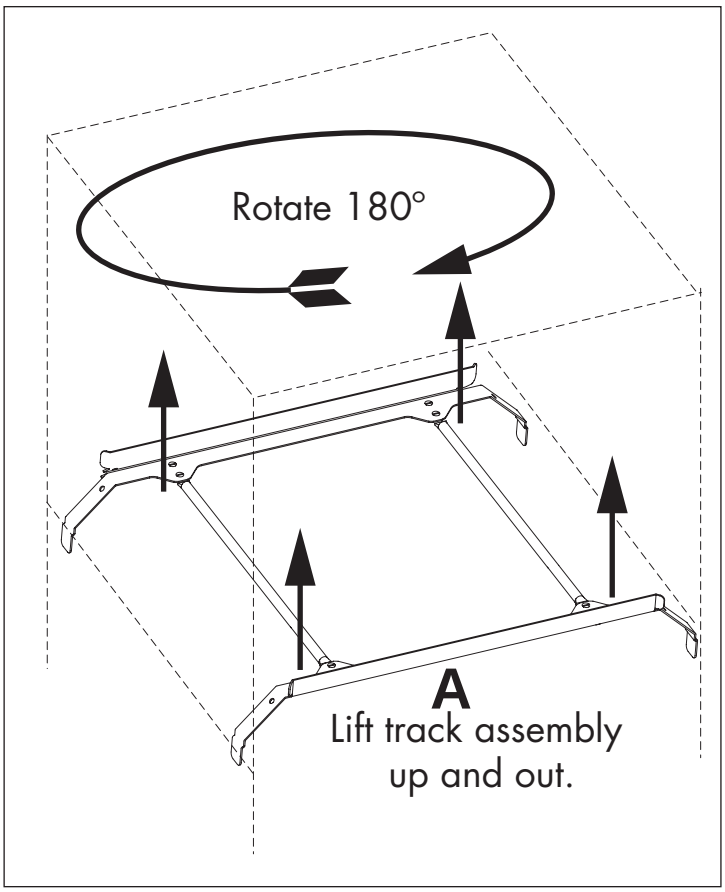

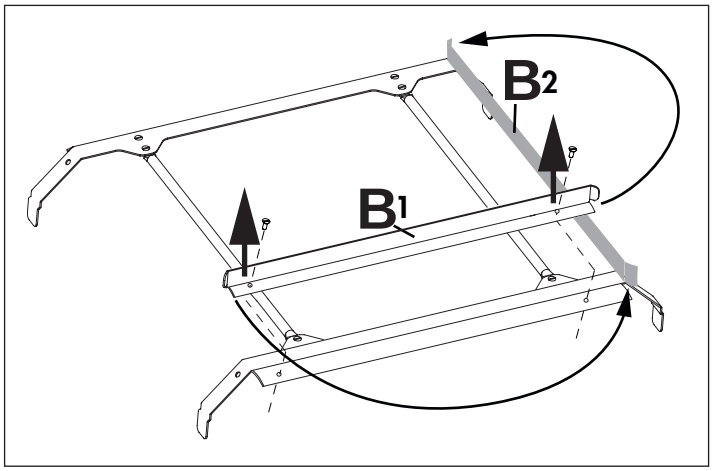

This is the end of the conversion instructions.

Electrical Connections

WARNING:
Electrocution or serious injury may result when working on an energized circuit.

Disconnect power at the main breaker or service disconnect switch before working on the circuit.

Lock-out and tag the breaker to indicate that work is being performed on the circuit.

! ATTENTION !
A qualified electrician must connect the main incoming power to the dishwasher in accordance with all local codes and regulations or in the absence of local codes in accordance with the National Electrical Code or the Canadian Electrical Code. Improper installation will not be covered by the Limited Warranty.

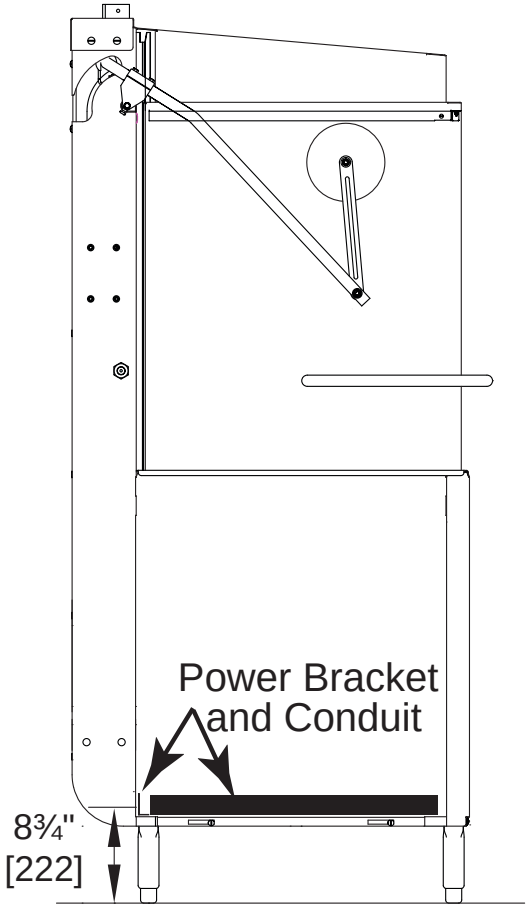

Incoming Power Routing.

Connecting Incoming Power Supply

1. Make sure the incoming power is disconnected at the main disconnect switch or circuit breaker.
2. The dishwasher is available for either single or three phase operation. Standard voltages are 208-240V/60/1 & 3, and 460-480V/60/3.
3. A **Machine Electrical Connection Data Plate** is located directly below the input terminal block. Make sure the incoming power supply matches the machine's electrical requirement before connecting incoming power.
4. Remove the front and left side dishwasher panels.
5. The incoming power supply is routed from the rear of the machine to the input terminal block located at the front of the machine. *(See A and B on next page).*
6. Connect the incoming power flexible conduit to the incoming conduit mounting bracket located on the rear of the dishwasher base making sure to leave 6 feet [2 m] of excess conduit and conductors to allow for servicing of the dishwasher.

continued on next page

Electrical Connections

Connecting Incoming Power Supply *(continued)*

1. Connect the incoming power flexible conduit to the incoming conduit mounting bracket located on the rear of the dishwasher base making sure to leave 6 feet [2 m] of excess conduit and conductors to allow for servicing of the dishwasher.
2. Route the power conductors through the 1-1/2" rigid PVC Power Cable Conduit to the front of the dishwasher as shown. *(See A and B below).*
3. Two cable tie mounts are provided on the base of the machine to secure the conductors. Make sure the conductors do not block the front of the booster tank, *(if equipped)*, so the booster can be serviced easily.
4. Refer to the terminal block connection diagrams below and connect the incoming power to the input terminal block as indicated according to the machine's power requirements. *(See C and D below).*

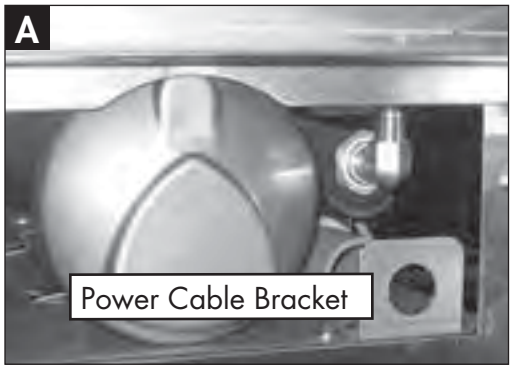

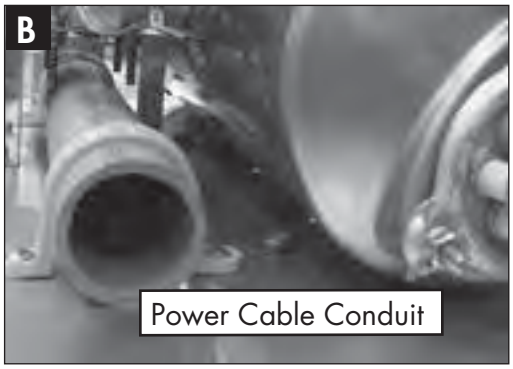

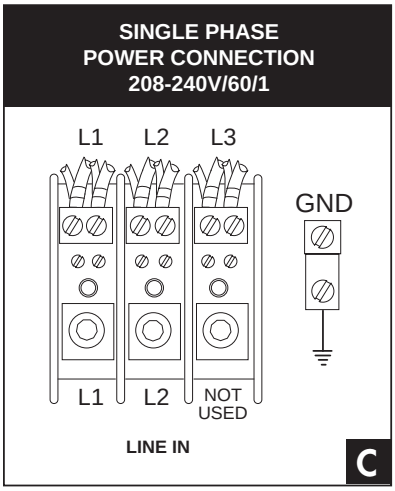

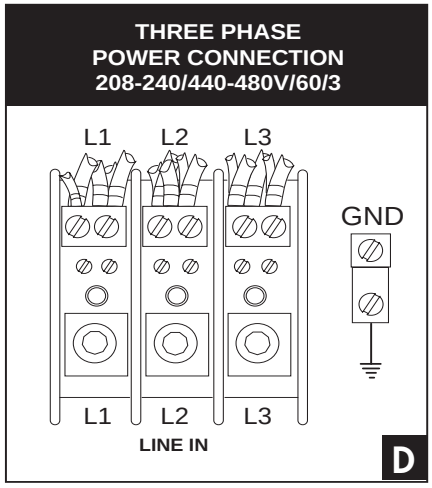

5. **CHECK MOTOR ROTATION FOR 208-240/460-480V/60/3 ONLY**. Check the rotation direction of the wash pump motor according to the indicator arrow on the motor end cover and reverse L1 and L2 at the input terminal block if the motor rotation is incorrect.

This Page Intentionally Left Blank

Water Connections for Standard Model and Direct Vent Option Model

! ATTENTION !
A qualified plumber must connect the water supply to the dishwasher in accordance with all local plumbing and sanitation codes and regulations.
Improper installation will not be covered by the Limited Warranty.

1. The Standard Model dishwasher and the Direct Vent Option Model require a single hot water connection

   HOT WATER — 3/4" NPT, 110°F/43°C minimum temperature, with a minimum incoming flowing pressure of 45 PSI measured at the dishwasher before adjusting operating pressure to 20/25 PSI flowing pressure.

2. A water hardness of 3 grains/gal (US) [51.3 mg/L] or less is recommended.

3. A manual shut-off valve, 3/4" or larger, should be installed in the hot water supply line as close to the dishwasher as possible for servicing.

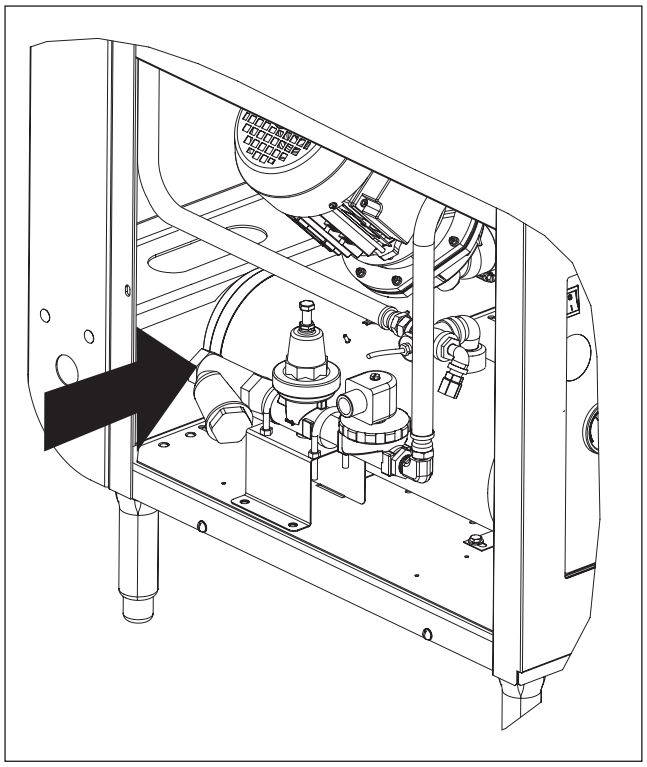

The incoming hot water line is a 3/4" NPT connection.

Water Connections for Condensate Removal Option Model

1. The dishwasher equipped with a Condensate Removal Option requires an incoming cold water supply only.

   COLD WATER — 3/4" NPT, 55-75°F/13-24°C maximum temperature, with a minimum incoming flowing pressure of 45 PSI measured at the dishwasher supply connection before adjusting operating pressure to 20/25 PSI flowing pressure.

2. A water hardness of 3 grains/gal (US) [51.3 mg/L] or less is recommended.

! VERY IMPORTANT !
The incoming cold water supply pressure must be a minimum of 45 PSI flowing pressure measured at the cold water supply connection.

3. The cold water supply connection is located on the left side of the dishwasher approximately 74" above the finished floor (see the illustration below).

4. A manual shut-off valve, 3/4" or larger, should be installed in the cold water supply line as close to the dishwasher as possible for servicing.

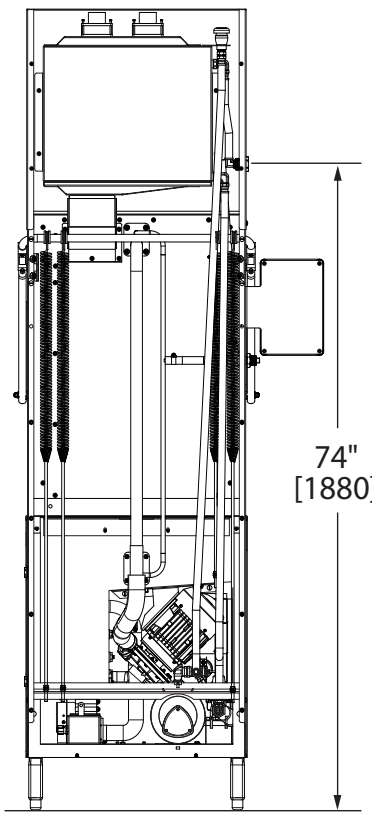

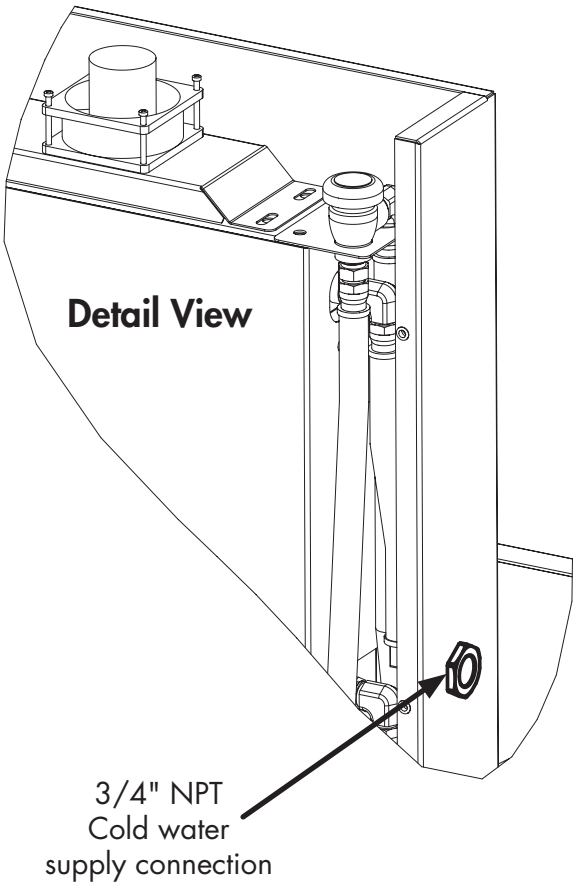

Drain Connection - All Models

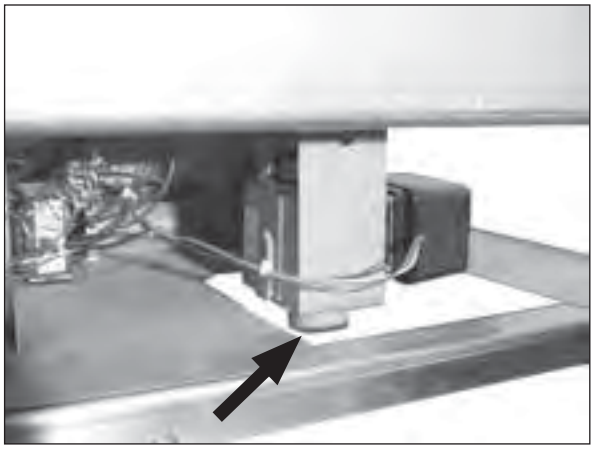

The drain is a 2" slip-fit hose connection.

The drain water connection is a 2" slip-fit hose connection and is located at the center-rear of the machine base. It is a gravity drain.

1. The dishwasher drain is 2" O.D. hose connection.
2. An optional drain water tempering kit is available (consult the factory).
3. Drain water flow is controlled by an automatic electrically operated drain valve.
4. The floor sink and/or drain plumbing must be able to accommodate a maximum drain flow rate of 20 US gpm / 17 Imp gpm / 76 Lpm.

Note: A Drain Water Tempering Kit Option is available to ensure the temperature of the water entering the drain does not exceed 140°F/60°C *(consult the factory)*.

Vent Fan Control for Standard Model Only

Standard Model installations using an overhead vent hood may require a vent fan signal. This signal is supplied by the dishwasher control circuit.

1. A vent fan control signal is provided on a terminal block located inside the control cabinet. The terminal locations are clearly marked.

2. The 120VAC signal is designed only to operate an external vent fan contactor (supplied by others) and is limited to .5 AMP maximum load and is available when the dishwasher power switch is turned ON.

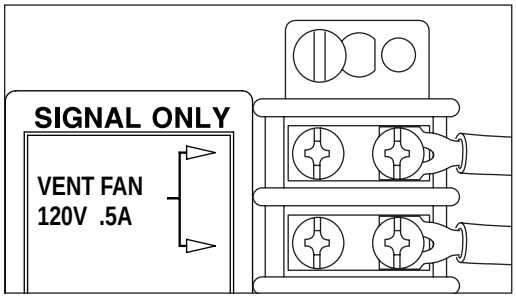

The Vent Fan Control Signal is limited to 120VAC .5 Amp maximum load.

CAUTION:
Do not connect a vent fan motor to the signal connection terminals.

Standard Model and Direct Vent Option Model Chemical Dispensing Provisions

! ATTENTION !
Consult a qualified chemical supplier for chemical supplies and chemical dispensing equipment.

Provisions for chemical suppliers to connect their chemical dispensing systems are provided on the dishwasher and include:

1. A 1/8" NPT fitting (A) rinse-aid injection point. The fitting is located on the left side of the dishwasher support hood (see illustration below).
2. Two 7/8" holes (B) are provided on the lower right side of the wash tank for detergent injection and the detergent probe.
3. Detergent and rinse-aid control signals are available inside the control cabinet.
4. The signals are 120VAC, Max. 1 Amp load. Connection points are located on a labeled terminal block (see below).

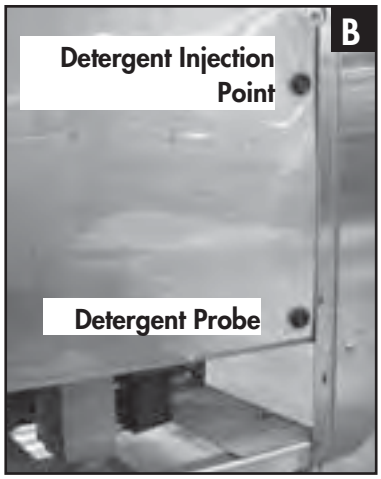

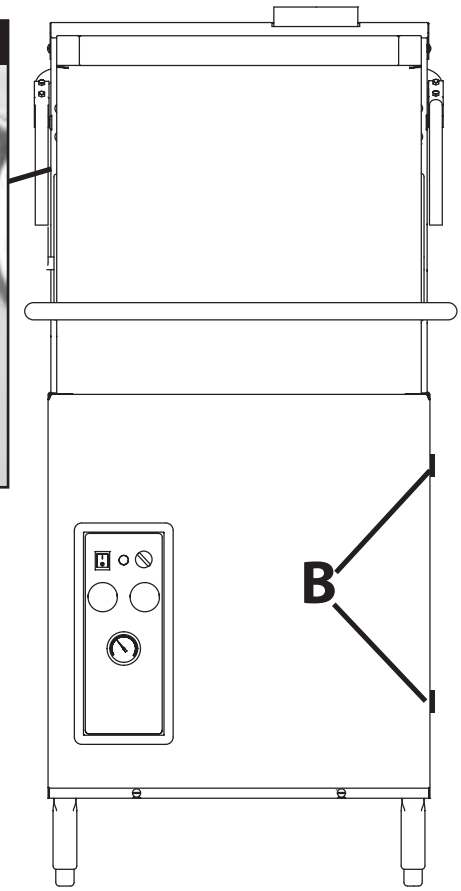

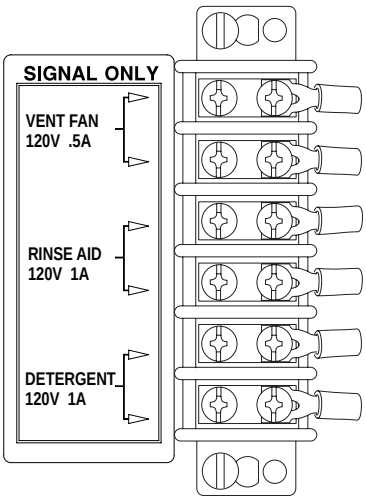

120VAC, 1A Dispenser Signal Terminal Block

Chemical Dispensing Provisions - Condensate Removal Option Model Only

! ATTENTION !
Consult a qualified chemical supplier for chemical supplies and chemical dispensing equipment.

A COMMERCIAL GRADE NON-CHLORINATED DETERGENT IS RECOMMENDED FOR THIS MACHINE.

Provisions for chemical suppliers to connect their chemical dispensing systems are provided on the dishwasher and include:

1. A 1/8" NPT fitting (A) rinse-aid injection point. The fitting is located on the left side of the dishwasher support hood (see illustration below).
2. Two 7/8" holes (B) are provided on the lower right side of the wash tank for detergent injection and the detergent probe.
3. Detergent and rinse-aid control signals are available inside the control cabinet.
4. The signals are 120VAC, Max. 1 Amp load. Connection points are located inside the control cabinet on a labeled terminal block (see below).

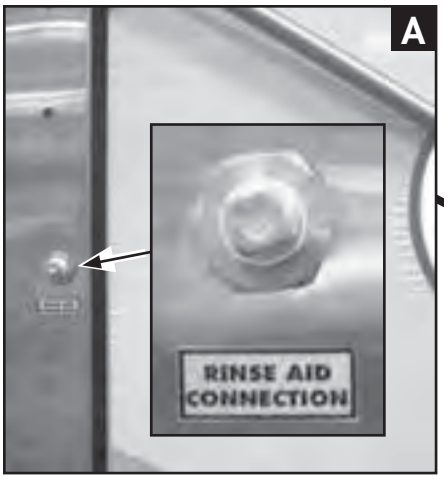

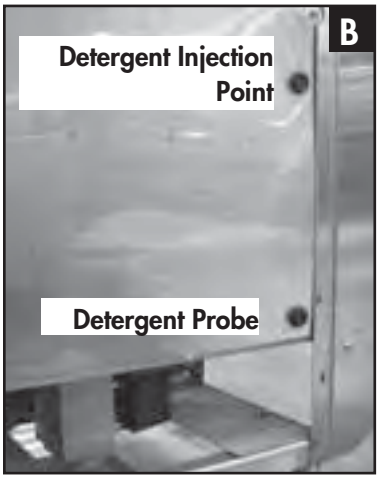

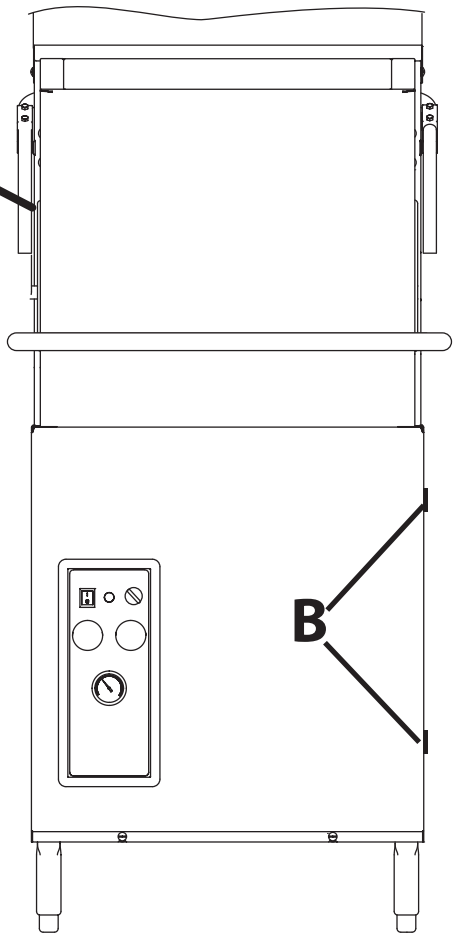

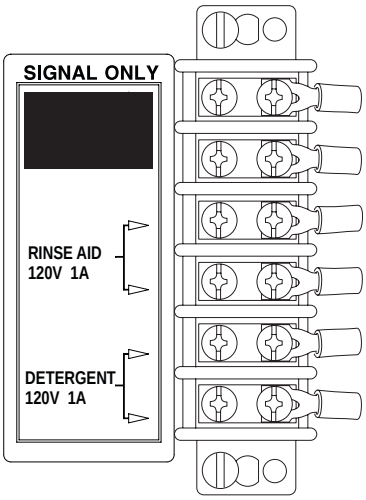

120VAC, 1A Dispenser Signal Terminal Block

Initial Start-up Check List

1. Remove any protective film from dishwasher. Check the interior for foreign material.
2. Make sure the dishwasher is permanently located.
3. Make sure all utility connections are complete.
4. Make sure the chemical supply containers are full.
5. Make sure the pump suction screen is in place.
6. Make sure the drain screen is clean and unobstructed by debris.
7. Make sure the scrap screen plate and scrap screens installed and firmly seated. The screen plate is mounted in the center of the wash tank and locks in a slot on the back screen support.
8. Make sure the spray arms are in place and spin freely.
9. Close the dishwasher hood.
10. Turn hot water supply on and check for leaks in the main water supply piping connected to the dishwasher.

IMPORTANT
During the initial fill, adjust the PRV to ensure the flowing pressure of the incoming water is set between 20-22 PSI.

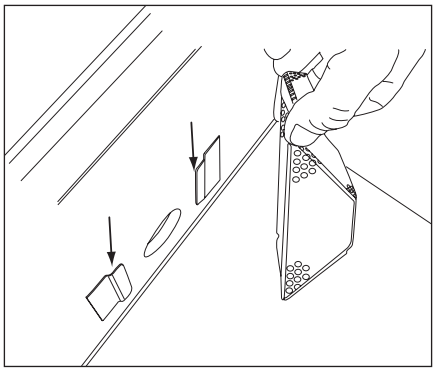

Make sure the pump suction strainer is in place.

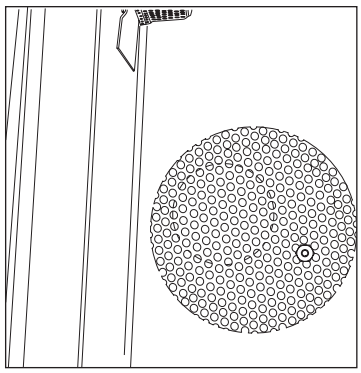

Make sure the drain screen is clean.

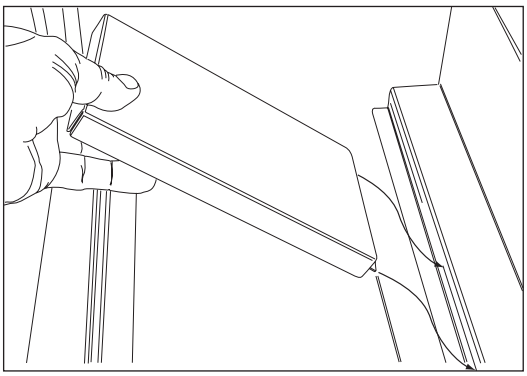

Make sure the scrap screen plate is mounted in the center of the wash tank and separating the scrap screens.

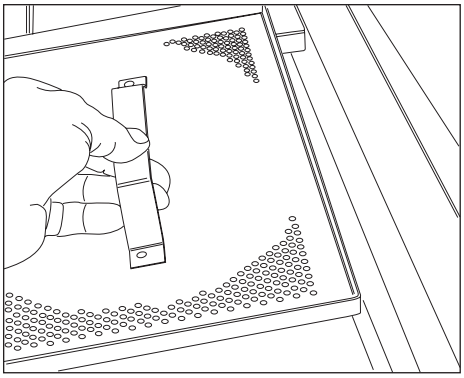

Make sure the scrap screens are in place.

Control Panel Description

The control panel is located on the front left side of the lower panel. The controls include:

A - **ON/OFF DRAIN** power switch. Turns power on and off and initiates a drain cycle when the switch is placed in the Off/Drain position.

B - **CYCLE** green indicator light. Illuminates during an automatic timed cycle. The cycle light is off during the 10 minute automatic drain cycle.

C- **CYCLE SELECTOR** switch. 4 positions provide 1 minute, and 1.5 minute total cycle times for normally soiled wares and 4 minute and 6 minute total cycle times for pots, pans and heavy soiled wares.

D- **WASH (150°F)** digital temperature display. Indicates the wash tank water temperature whenever the dishwasher tank is full of water *(See next page, Digital Temperature Displays).*

E- **RINSE (180°F)** digital temperature display. Indicates the final rinse water temperature during the final rinse *(See next page, Digital Temperature Displays).*

F- **PRESSURE** gauge. Indicates the final rinse water flowing pressure during the final rinse. The proper pressure reading is 20-22 PSI during the final rinse.

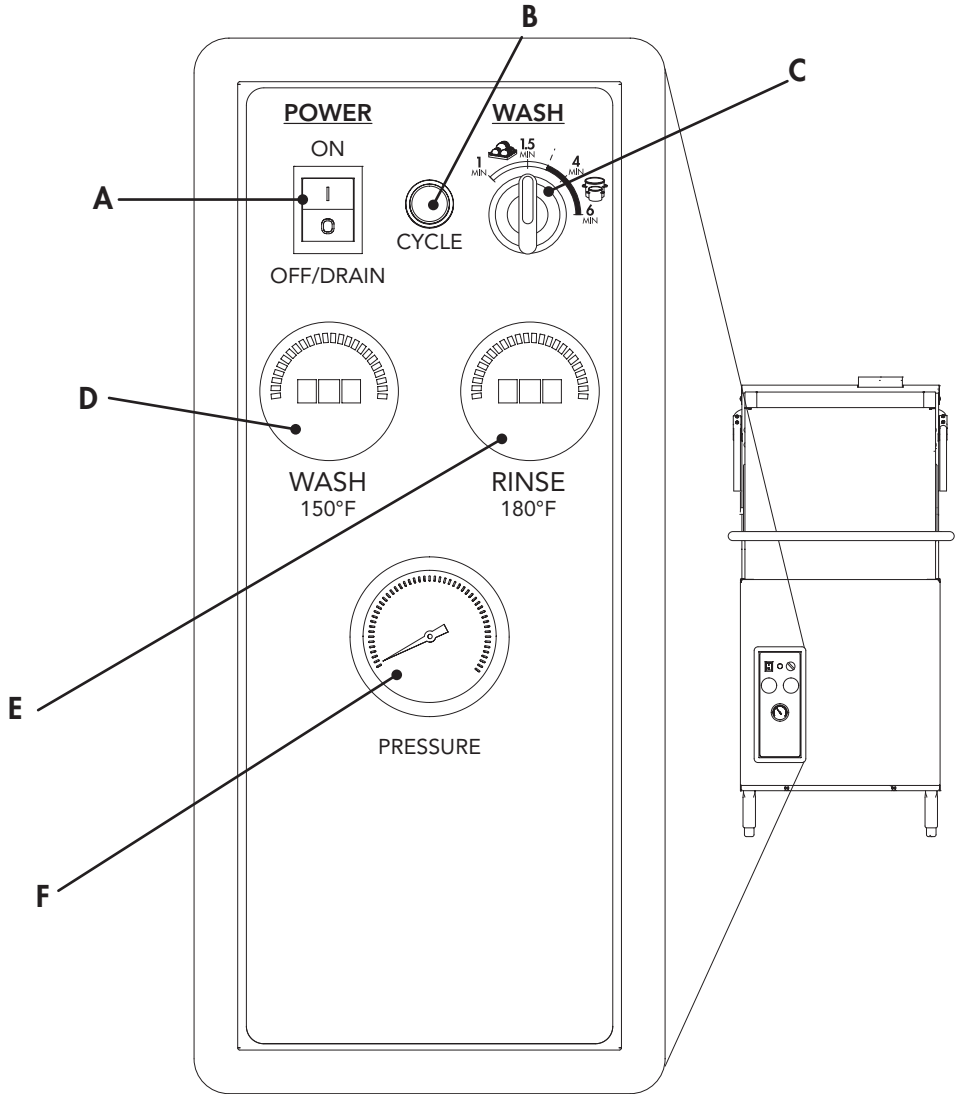

Digital Temperature Display Description

The wash tank and the final rinse temperatures are numerically displayed and a colored bar around the numbers creates a visual indication of the temperature.

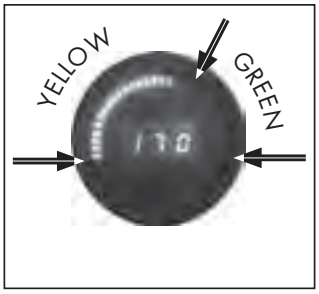

1. When the color of the bar is yellow then the water temperature is below the minimum temperature required to operate the machine. Wait until the temperature has reached the proper operating temperature.

2. When the color of the bar is yellow and green then the water temperature is at or above the minimum temperature required to operate the machine.

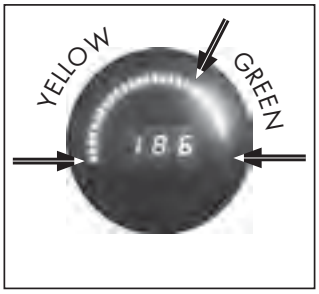

3. The required wash temperature is a minimum of 150°F/66°C. Wait until the display indicates this temperature before washing dishes.

4. The required final rinse temperature is a min/max of 180-195°F/82-91°C. Contact a factory authorized service agent if the display fails to indicate this temperature during the final rinse.

NOTE:
The final rinse display may indicate a temperature that is less than a minimum of 180°F/82°C during the wash cycle. This is normal, but during the final rinse *(when the pressure gauge indicates a flowing pressure of 20-22 PSI)*, the final rinse temperature display will read between 180-195°F/82-91°C.

Temperature Display Error Codes

A digital display may show an error code to indicate certain conditions that require service or repair. Refer to the illustrations below for the meaning of the error codes.

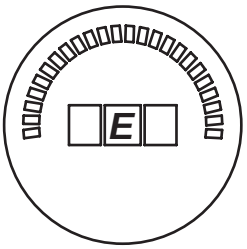	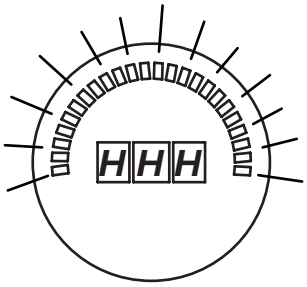
The letter "E" is displayed with a dark color bar indicates a problem exists in the electrical circuit. Contact an authorized service agent to correct the problem.	Three "H"s displayed with the color bar fully lit indicates the temperature has exceeded 210°F/99°C. Contact an authorized service agent to correct the problem.

Standard Wash Cycle Operation

Follow the instructions below to operate the dishwasher in a Standard Wash Cycle. A Rinse Sentry feature holds the dishwasher in a wash cycle if the booster heater temperature is below 180°F/82°C.

1. Turn the main power on at the main circuit breaker.
2. Make sure the spray arms and the scrap screens are in place.
3. Turn the water supply on.
4. Close the dishwasher hood.
5. Turn the wash cycle selector switch to the desired standard setting of 1 or 1.5 minutes.

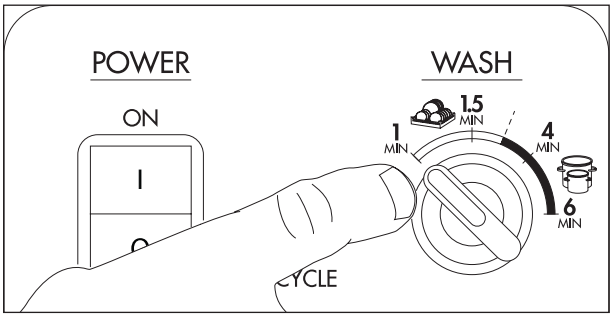

Standard 1 minute Setting

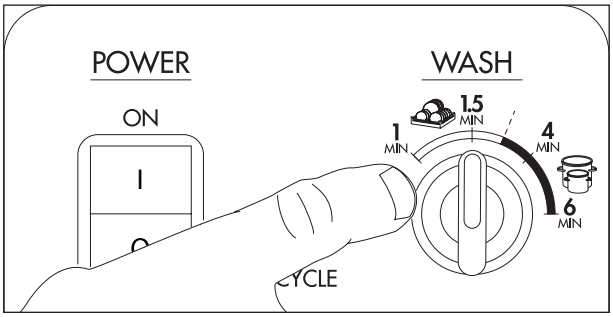

Standard 1.5 minute Setting

6. Push the dishwasher Power Switch to the ON position. The power switch will illuminate and the machine will fill with water.

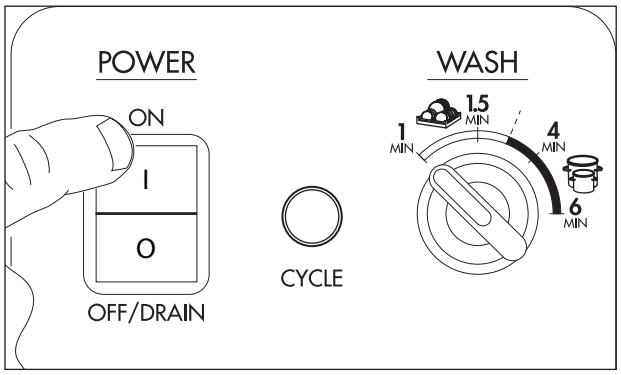

! VERY IMPORTANT !

THE STANDARD CYCLE MAY BE SELECTED BEFORE OR AFTER THE POWER SWITCH IS PRESSED; BUT, THE CYCLE SELECTOR SWITCH WILL NOT CHANGE THE CYCLE FROM 1 MINUTE TO 1.5 MINUTES OR VICE VERSA WHILE THE DISHWASHER IS ALREADY IN CYCLE.

7. Check the pressure gauge as the machine fills and make sure the incoming water flowing pressure is between 20-22 psi.

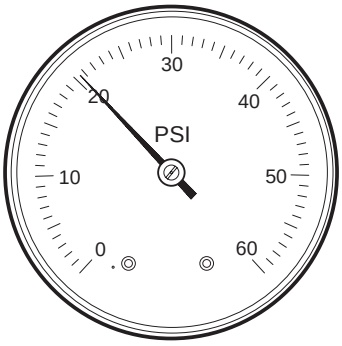

Standard Wash Cycle Operation *(continued)*

8. Wait up to 10 minutes for the WASH temperature display to indicate a minimum of 150°F/66°C.

NOTE:
The final rinse display may indicate a temperature that is less than a minimum of 180°F/82°C during the wash cycle. This is normal, but during the final rinse *(when the pressure gauge indicates a flowing pressure of 20-22 PSI)*, the final rinse temperature display will read between 180-195°F/82-91°C.

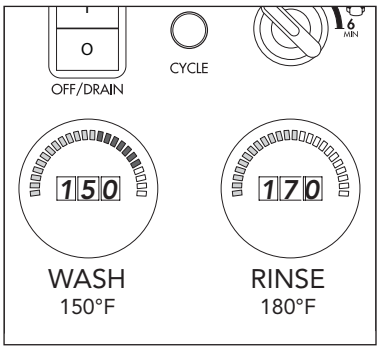

9. Load soiled wares into the dish rack. Place plates, glasses, cups and bowls in a peg rack. Place utensils in a single layer in a flat-bottom rack. Place pots and pans in a flat-bottom rack. Do not overload the dish racks.

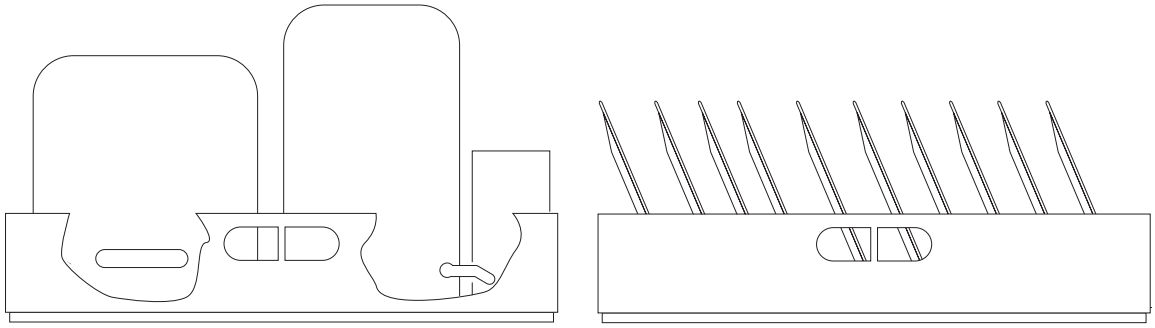

10. Slide 1 dish rack into the wash compartment making sure the wares do not interfere with the rotating spray arms. Do not wash more than 1 dish rack at a time.
11. Close the hood, the green CYCLE light will illuminate and the standard wash cycle will begin automatically.

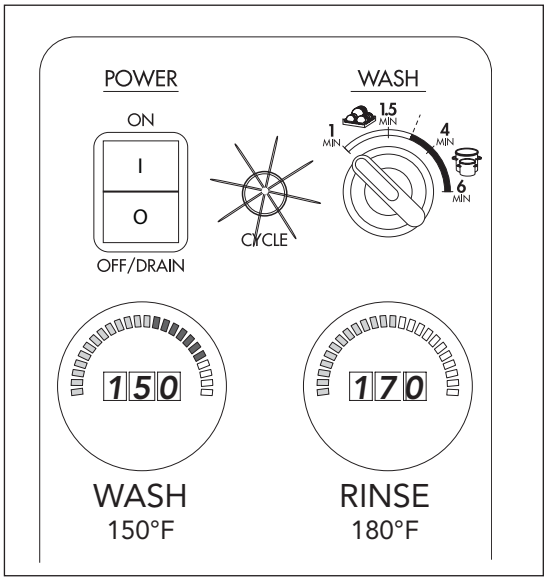

Standard Wash Cycle Operation *(continued)*

(continued on next page)

12. The wash cycle time runs for the selected time.
13. Opening the hood when the dishwasher is in-cycle will pause the cycle. The cycle will resume automatically when the dishwasher hood is closed.
14. The final rinse cycle begins at the end of the wash cycle and runs for approximately 10 seconds followed by a 15 second delay before the green CYCLE light goes out.
15. Check the FINAL RINSE temperature gauge during the final rinse and make sure it indicates a minimum of 180°F/82°C. The acceptable range of operation is 180-195°F/82-91°C.

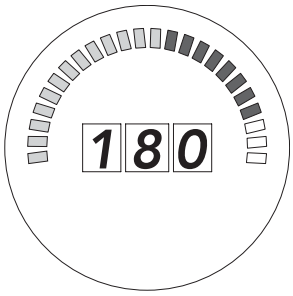

RINSE
180°F

16. Check the pressure gauge located below the temperature displays to ensure the final rinse pressure maintains a flowing pressure between 20-22 PSI.

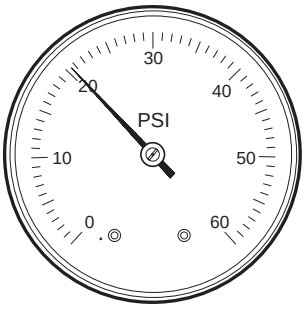

17. At the end of the rinse cycle, the in-cycle light will go out. Open the hood and remove the clean rack of wares.
18. Repeat steps 9-17 for additional dish racks.
19. Refer to the *Automatic Drain Cycle* on the next page for the procedures to drain the dishwasher.

Automatic Drain Cycle

The dishwasher can be drained automatically when the dishwasher has completed a normal wash cycle or whenever the dishwasher is idle.

To drain the dishwasher:

1. Push the dishwasher power Switch down to the OFF/DRAIN position. The illuminated power switch will go out. The automatic drain valve will open and the machine will drain.

2. The CYCLE light is not illuminated during the automatic drain cycle.

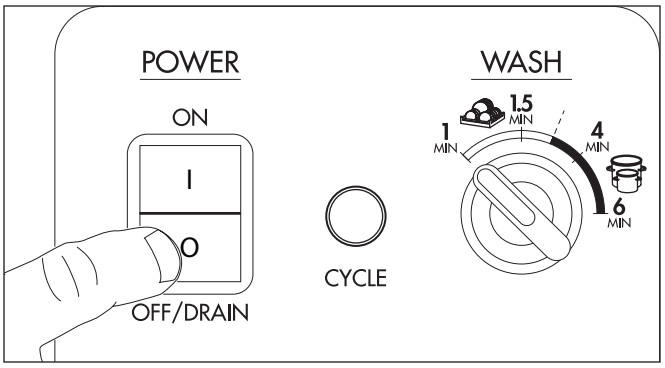

3. The drain valve will remain open for 10 minutes to allow time to flush the interior with fresh water during a cleaning operation.
4. When 10 minutes has elapsed, the drain valve will close.
   The automatic drain cycle is complete.

NOTE:
The automatic drain cycle can be repeated after 10 minutes by pushing the power Switch to ON and immediately to OFF/DRAIN. The dishwasher will drain for another 10 minutes and then turn off.

Heavy Duty Wash Cycle Operation

! VERY IMPORTANT !
THE HEAVY DUTY CYCLE MAY BE SELECTED BEFORE OR AFTER THE POWER SWITCH IS PRESSED; BUT, THE CYCLE SELECTOR SWITCH WILL NOT CHANGE THE CYCLE FROM 4 MINUTES TO 6 MINUTES OR VICE VERSA WHILE THE DISHWASHER IS ALREADY IN CYCLE.

Follow the instructions below to operate the dishwasher in the Heavy Duty Wash Cycle. A Rinse Sentry feature holds the dishwasher in a wash cycle if the booster heater temperature is below 180°F/82°C.

1. Turn the main power on at the main circuit breaker.
2. Make sure the spray arms and the scrap screens are in place.
3. Turn the water supply on.
4. Close the dishwasher hood.
5. Turn the wash cycle selector switch to the desired heavy duty setting of 4 or 6 minutes.

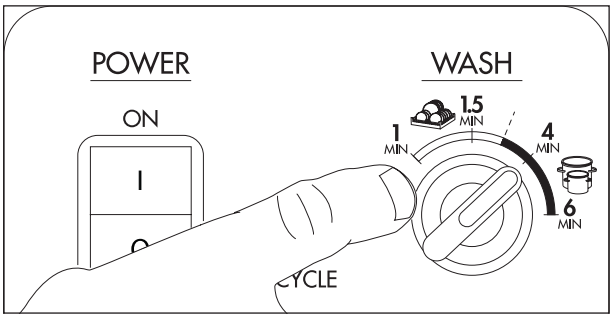

Heavy Duty 4 minute Setting

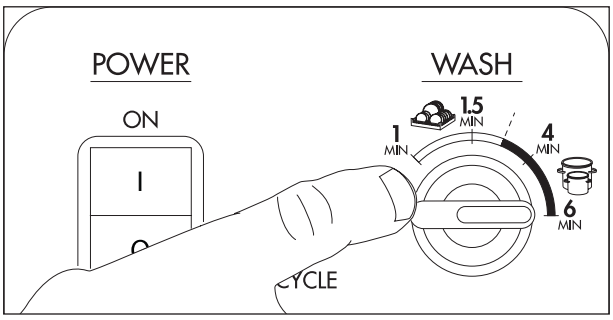

Heavy Duty 6 minute Setting

6. Push the dishwasher Power Switch to the ON position. The power switch will illuminate and the machine will fill with water.

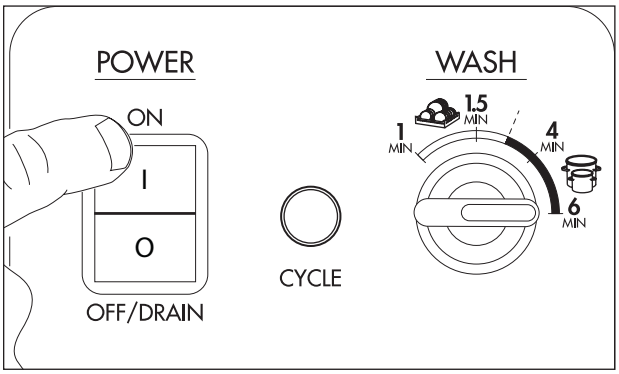

Heavy Duty Wash Cycle Operation (continued)

7. Check the pressure gauge as the machine fills and make sure the incoming water flowing pressure is between 20-22 psi.

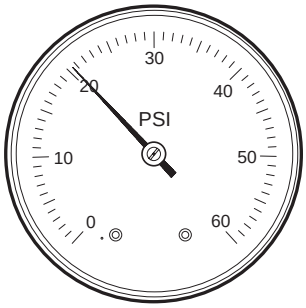

8. Wait up to 10 minutes for the WASH temperature display to indicate a minimum of 150°F/66°C.

NOTE:
The final rinse display may indicate a temperature that is less than a minimum of 180°F/82°C during the wash cycle. This is normal, but during the final rinse *(when the pressure gauge indicates a flowing pressure of 20-22 PSI)*, the final rinse temperature display will read between 180-195°F/82-91°C.

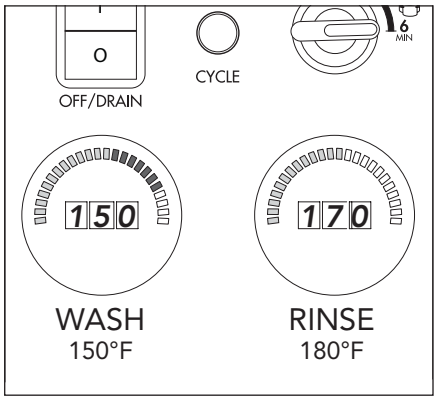

9. Load soiled wares into the dish rack. Place plates, glasses, cups and bowls in a peg rack. Place utensils in a single layer in a flat-bottom rack. Place pots and pans in a flat-bottom rack. Do not overload the dish racks.

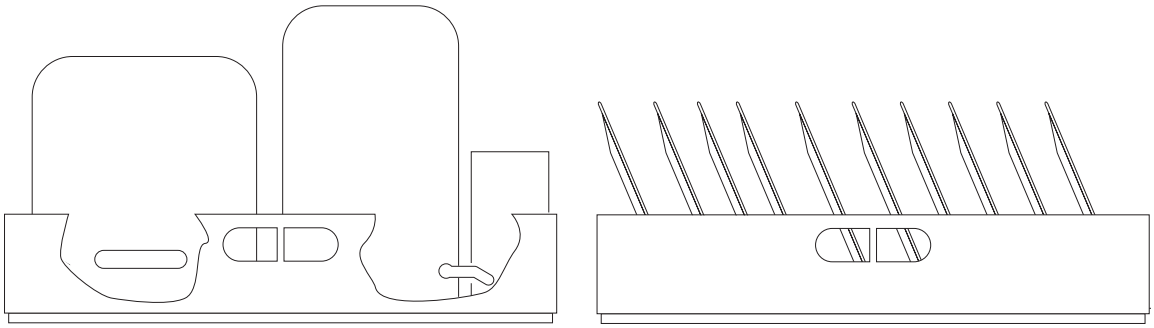

10. Slide 1 dish rack into the wash compartment making sure the wares do not interfere with the rotating spray arms. Do not wash more than 1 dish rack at a time.

(continued on next page)

Heavy Duty Wash Cycle Operation (continued)

11. Close the hood, the green CYCLE light will illuminate and the heavy duty wash cycle will begin automatically. The wash cycle time runs for the selected time.

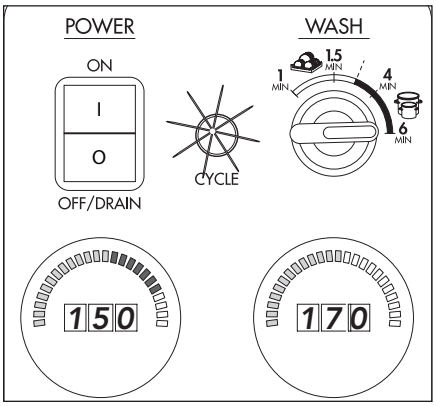

12. Opening the hood when the dishwasher is in-cycle will pause the cycle. The cycle will resume automatically when the dishwasher hood is closed.
13. The final rinse cycle begins at the end of the wash cycle and runs for approximately 10 seconds followed by a 15 second delay before the green CYCLE light goes out.
14. Check the FINAL RINSE temperature gauge during the final rinse and make sure it indicates a minimum of 180°F/82°C. The acceptable range of operation is 180-195°F/82-91°C.

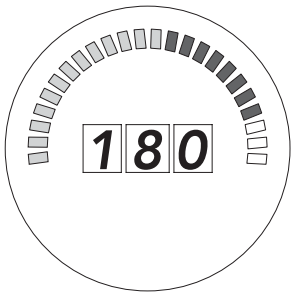

RINSE
180°F

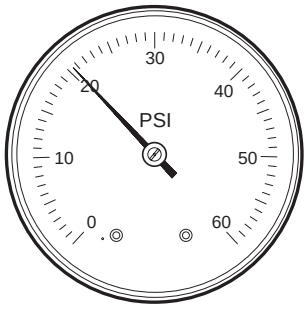

15. Check the pressure gauge located below the temperature displays to ensure the final rinse pressure maintains a flowing pressure between 20-22 PSI.
16. At the end of the rinse cycle, the in-cycle light will go out. Open the hood and remove the clean rack of wares.
17. Repeat steps 9-16 for additional dish racks.
18. Refer to the *Automatic Drain Cycle* on page 21 for the procedures to drain the dishwasher.

Rinse Sentry Operation Mode

The final rinse water temperature must be a minimum of 180°F/82°C during the final rinse cycle to ensure all wares are sanitized. If for any reason, the hot water temperature in the booster tank cannot provide this temperature, the dishwasher will enter a Rinse Sentry Mode of operation and extend the cycle time.

The Rinse Sentry changes the Standard and Heavy Duty cycle time as described below:

1. The Rinse Sentry constantly monitors the water temperature inside final rinse booster.
2. If the temperature inside the booster heater falls below 180°F/82°C, the Rinse Sentry will extend the wash cycle time until the booster heater water temperature reaches the proper temperature.
3. The CYCLE light will remain illuminated during the Rinse Sentry Mode.
4. The RINSE water temperature display must be monitored to ensure a minimum of 180°F/82°C is maintained during the rinse cycle.
5. The acceptable temperature range for the final rinse water is 180-195°F/82-91°C.
6. A wash cycle time of more than 6 minutes may indicate a low incoming water temperature or a problem with the booster tank operation.

! VERY IMPORTANT !
DO NOT REMOVE WARES UNTIL THE FINAL RINSE CYCLE HAS SANITIZED THE WARES AND THE GREEN CYCLE LIGHT GOES OUT.

! NOTE !
A wash cycle time of more than 6 minutes may indicate a low incoming water temperature or a problem with the booster tank operation.

Cleaning

After Each Meal Period or every 8 Hours of Operation.

1. Push the lighted power switch DOWN to the OFF/DRAIN position.
2. The power switch light will go out and the automatic drain cycle will operate for 10 minutes. The cycle light is not illuminated during the drain cycle.
3. Open the hood and flush the interior of the machine with fresh water.
4. Remove the scrap screens and remove debris to a waste container.
5. Flush the scrap screens making sure to back-flush.
6. Do not strike the scrap screens against solid objects.
7. Flush the wash tank, the pump suction strainer and drain screen.
8. Check the wash tank for foreign material and clean as required.
9. Replace pump suction strainer and scrap screens.
10. Make sure the spray arms turn freely.
11. Check the chemical containers and refill as required.
12. Close the door and turn the power switch ON. The machine will fill automatically.
13. Resume normal operation.

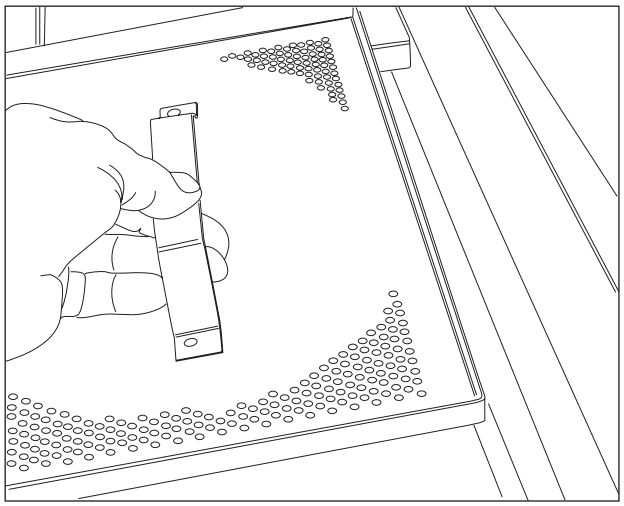

Clean scrap screens.

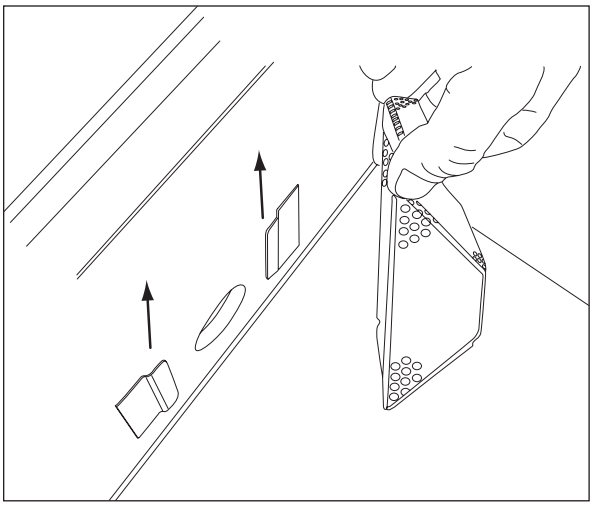

Clean pump suction strainer

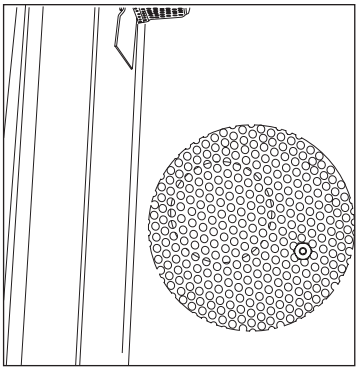

Clean drain screen.

Cleaning

At the End of the Day

1. Perform Steps 1-10 on the previous page.
2. Remove the upper and lower rinse and wash spray arms. The spray arms are interchangeable.
3. Unscrew the upper and lower rinse arm spindles (A). Remove the rinse arm assemblies
4. Clean the final rinse arm nozzles using a small paper clip (B).
5. Remove the rinse arm end plugs (C) *if necessary,* and flush the rinse arm with clean water.
6. Re-install the rinse arm end plugs if they were removed.
7. Remove the wash spray arms and flush with clean water.
8. ONLY USE NON-METALLIC SCRUB PADS TO CLEAN THE INTERIOR.
9. Contact the chemical supplier for de-liming if required *(see next page)*.
10. Wipe the interior and exterior of the machine with a soft cloth and a mild detergent. DO NOT HOSE THE EXTERIOR OF THE MACHINE WITH WATER.
11. Reassemble the dishwasher and leave the hood open to allow overnight drying.

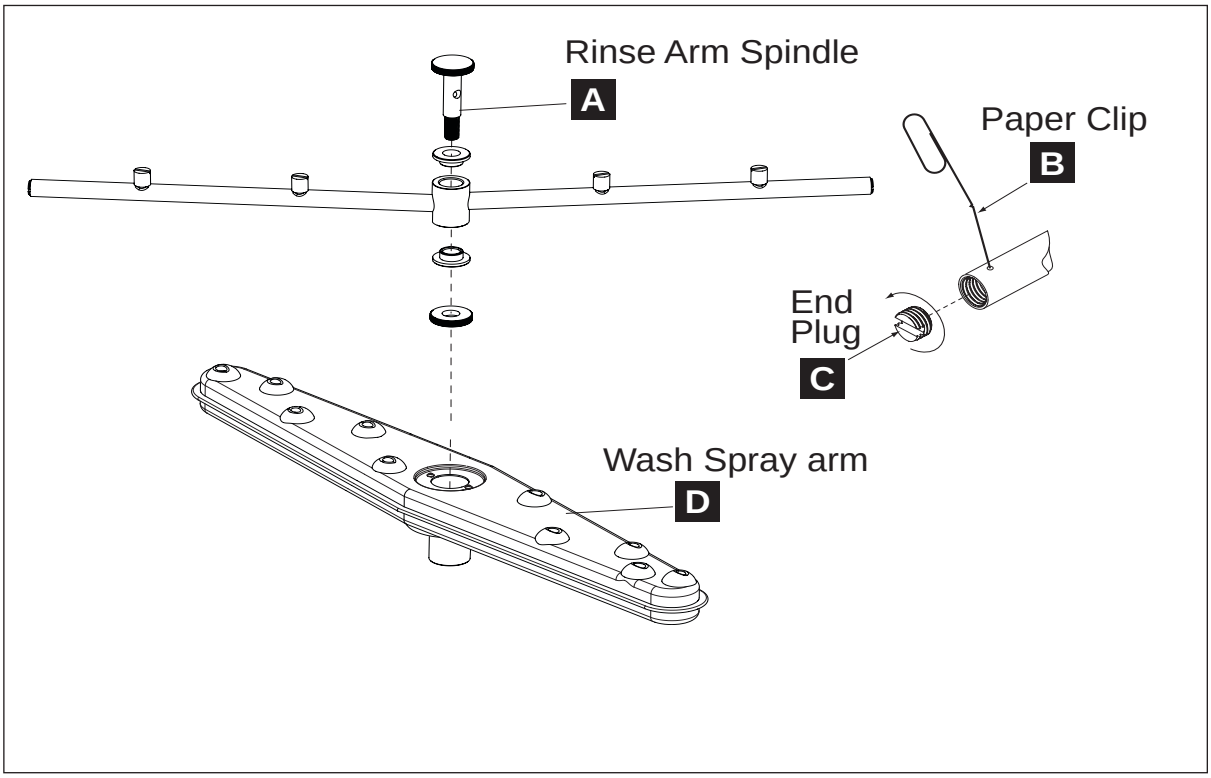

De-liming

Minerals accumulate on the interior surfaces of the dishwasher. The deposits have a white haze and, in cases of heavy accumulation, may appear as a granular solid. The generic name for mineral deposits is lime. The removal of lime deposits is called de-liming. Your dishwasher should be de-limed regularly; how often will depend on the mineral content of your water.

Inspect your machine interior for lime deposits. If de-liming is required, a de-liming agent should be used for best results in accordance with the chemical supplier's instructions.

! DANGER !
Death or serious injury may result when de-liming solution is mixed with sodium hypochlorite (chlorine bleach) sanitizing agent. Mixing may cause hazardous gases to form. De-liming solution and other acids must never be mixed with chlorine, iodine, bromine, or fluorine.

! CAUTION !
Skin contact with de-liming solutions can cause severe irritation and possible chemical burns. Always wear protective clothing and goggles when handling chemicals.

! VERY IMPORTANT !

CONTACT YOUR CHEMICAL SUPPLIER FOR THE PROPER DELIMING CHEMICALS.

FOLLOW YOUR CHEMICAL SUPPLIER'S INSTRUCTIONS MAKING SURE TO WEAR ALL NECESSARY PROTECTION INCLUDING EYE PROTECTION, RUBBER GLOVES AND PROTECTIVE CLOTHING

WHEN HANDLING CHEMICALS.

Maintenance

Daily Maintenance

1. Check all of the wash arm and rinse arm spray jets and clean as necessary.
2. Make sure the water supply is on and the drain is not clogged.
3. Check the temperature displays to ensure they are operating.
4. Make sure the dish racks are in good condition.
5. Check the chemical containers and refill as required.
6. Follow the cleaning procedures given above.

Weekly Maintenance

1. Perform Steps 1-5 in the Daily Maintenance.
2. Inspect water lines for leaks.
3. Check for water leaks underneath the dishwasher.
4. Make sure the floor drain and/or piping handles the drain water discharge.
5. Make sure the dishwasher is level.
6. Clean accumulated lime deposits from the wash tank heating element.
7. Inspect the scrap screen and replace it if damaged.
8. Check the spray arms and replace or repair if damaged.

Yearly Maintenance

Contact your authorized service agent for a preventive maintenance inspection.

Lubrication

There are no lubrication points nor schedules for this dishwasher.

NOTE:
Consult your chemical supplier for chemical dispensing system maintenance.

Follow the troubleshooting guide below in the event your dishwasher does not operate as expected.

Condition	Cause	Solution
Dishwasher will not run.	Hood not closed. Main power OFF. Dishwasher OFF.	Close Hood completely. Check breaker on panel. Turn dishwasher ON.
Low or no water.	Main water supply off. PRV setting incorrect Line strainer clogged. Solenoid valve defective.	Open supply valve. Set to 20-22 PSI flowing. Contact Service Agent. Contact Service Agent.
Chemicals won't feed into dishwasher.	Chemical supply low. Pick-up tube clogged Supply tubing damaged. Supply tubing kinked.	Refill chemical container. Contact Chemical Supplier. Contact Chemical Supplier. Straighten tubing.
Poor wash results.	Wares incorrectly loaded. in dishrack. Clogged screens. Clogged spray arms. Chemical injectors not feeding. Thermostat defective. Detergent Dispenser defective. Water temperature low.	Reposition wares or reduce amount of wares. Clean screens. Clean spray arms. Contact Chemical Supplier. Contact Service Agent. Contact Chemical Supplier. Contact Service Agent
Dishwasher stays in wash cycle.	Rinse Sentry extends wash mode to allow final rinse water booster temperature to reach 180°F/82°C.	Contact Service Agent if wash cycle runs for longer than 6 minutes.
Dishwasher will not drain.	Drain screen clogged. Drain valve defective. Building drain clogged.	Clean drain screen. Contact Service Agent. Contact Building Maintenance.
Direct Vent Option Model Steam not being vented	Direct Vent Fan blocked or defective.	Contact Service Agent or Building Maintenance.
Condensate Removal Option Model Steam not being vented	Incoming cold water temp. is above 75°F/24°C. Incoming water pressure is below 45 PSI flowing pressure at the dishwasher. Condensate coil or fan defective	Check incoming water temperature. Check incoming water pressure. Contact Service Agent.

Service Replacement Parts

Illustrations Page

Wash Pump/Motor Assembly 32

Fill Piping Assembly without Booster - Standard Model and Direct Vent Option Model Only 34

Fill Piping Assembly with Booster - Standard Model and Direct Vent Option Model 36

Fill Piping Assembly with Booster - Condensate Removal Option Model Only 38

Booster Assembly - All Models and Options 40

Control Panel Assembly 42

Control Cabinet and Input Terminal Block Assembly 44

Wash/Rinse Spray Piping - Standard Model and Direct Vent Option Model 46

Wash/Rinse Spray Piping - Condensate Removal Option Model 48

Wash and Rinse Spray Arm Assemblies 50

Wash Tank Heat, Drain, Screens, and Hoses 52

Track and Panel Assemblies 54

Hood and Hood Handle Assemblies 56

Back Support and Hood Guide Assembly 58

Condensate Removal Option and Direct Vent Option - Electrical Control Box 60

Direct Vent Option - Shroud and Exhaust Fan 62

Condensate Removal Option - Shroud, Fan, and Coil 64

Drain Water Tempering Assembly 66

Hot Water Coil Heat Assembly 68

Dish racks, Line Strainer and Pressure Regulating Valve (PRV) 70

Temperature Display Adjustment - *(For Service Technicians Only)* 72

P/N 115109 rev. A - Direct Vent Option Installation Instructions 79

P/N 115107 rev. B - Condensate Removal Option Installation Instructions 91

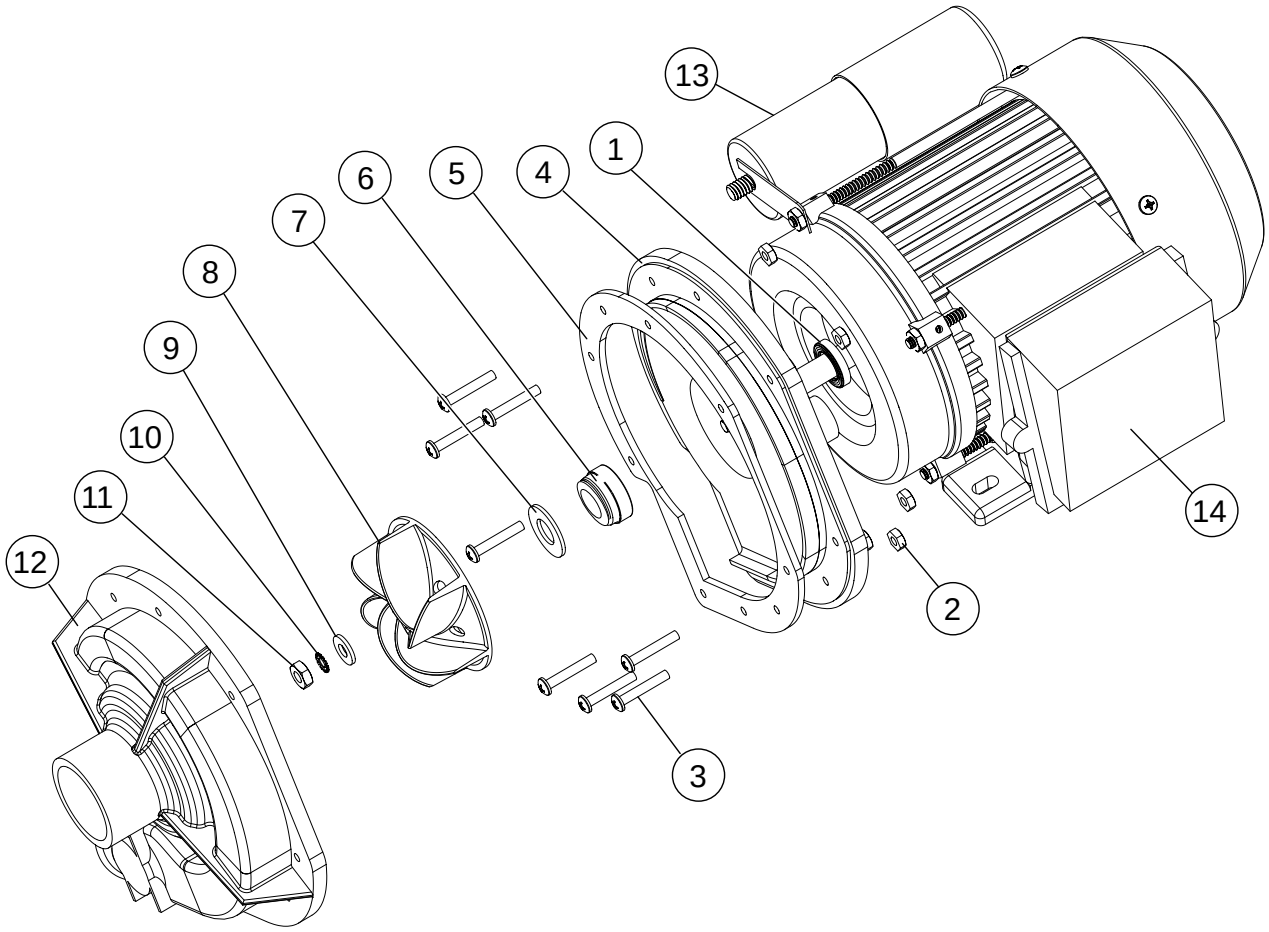
13
1
4
5
6
7
8
9
10
11
12
14
2
3

Item No.	Part No.	Description	Qty.
1	114134	SLINGER, WATER	1
2	114135	NUT	9
3	114136	SCREW	9
4	114137	PLATE, BACKING, C/W CAPACITOR BRKT.	1
5	110285	GASKET, PUMP	1
6	114139	SEAL, PUMP	1
7	114140	WASHER	1
8	114141	IMPELLER	1
9	114142	WASHER	1
10	114143	WASHER, LOCK	1
11	114144	NUT, IMPELLER (LH THREADS)	1
12	114145	HOUSING, PUMP	1
13	114322	CAPACITOR 15µF 240VAC	1
14	115143	PUMP/MOTOR ASSEMBLY COMPLETE 208-240VAC/50-60/1PH, 2HP	1
–	115144	PUMP/MOTOR ASSEMBLY COMPLETE 208-266/360-460VAC/60/3PH, 2HP	1

! ATTENTION !

THE MOTOR CANNOT BE ORDERED AS A SEPARATE REPLACEMENT PART.

Fill Piping Assembly without Booster - Standard Model and Direct Vent Option Model Only

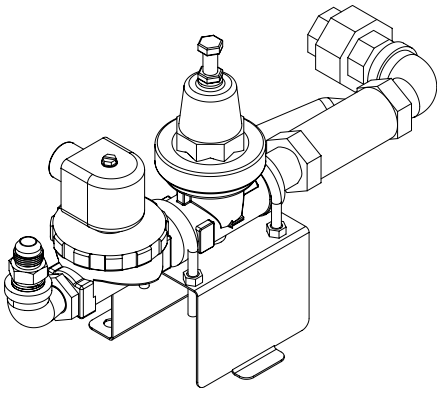

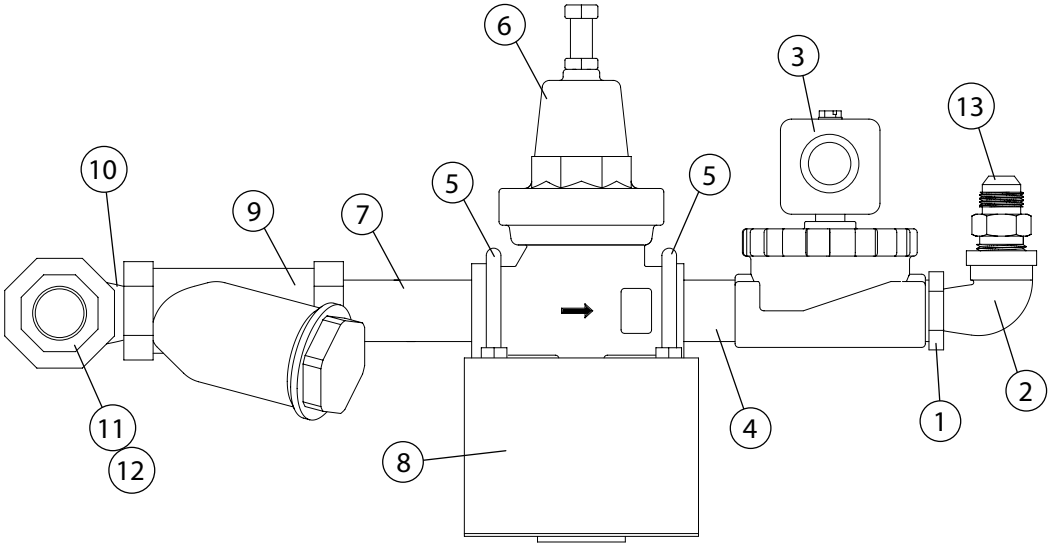

Item No.	Part No.	Description	Qty.
1	102392	BUSHING, REDUCING, 3/4" NPT X 1/2" NPT BRASS	2
2	102438	ELBOW, STREET 1/2" NPT X 90° BRASS	1
3	111437	VALVE, SOLENOID 3/4" NPT HW	1
–	114839	KIT, REPAIR VALVE 3/4" HW	A/R
–	111472	COIL, SOLENOID 3/4" 120V	A/R
4	102651	NIPPLE, 3/4" NPT X 2" LG. BRASS	A/R
5	115169	U-BOLT, 1/4-20 X 1¾" X 3" LG. (COMES WITH NUTS)	2
6	107550	VALVE, PRESSURE REGULATING 3/4" NPT BRONZE	1
7	102653	NIPPLE, 3/4" NPT X 4" LG. BRASS	A/R
8	334775	BRACKET, DH5000 INLET PLUMBING SUPPORT	1
9	110768	STRAINER, LINE 3/4" NPT BRONZE FEMALE	1
10	102444	ELBOW, STREET 3/4" NPT X 90° BRASS	1
11	100184	NIPPLE, 3/4" NPT X CLOSE BRASS	1
12	100571	UNION, 3/4" NPT BRASS	1
13	115101	CONNECTOR, MALE 1/2" NPT X 1/2" 37° FLARE BRASS	1

Fill Piping Assembly with Booster - Standard Model and Direct Vent Option Model Only

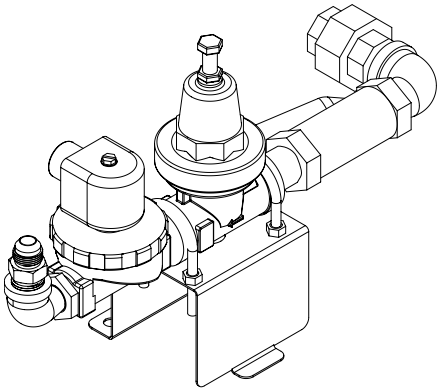

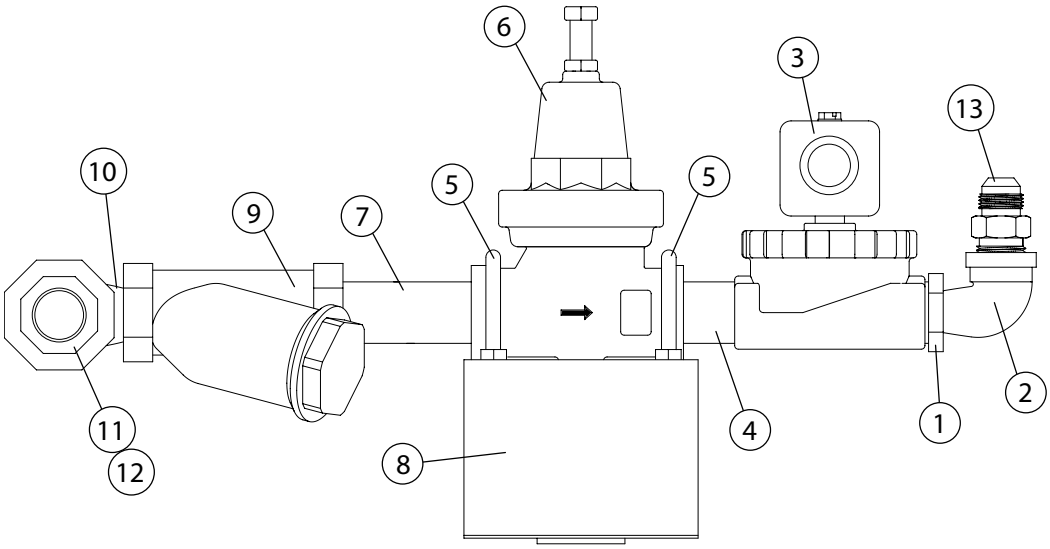

Item No.	Part No.	Description	Qty.
1	102392	BUSHING, REDUCING, 3/4" NPT X 1/2" NPT BRASS	2
2	102438	ELBOW, STREET 1/2" NPT X 90° BRASS	1
3	111437	VALVE, SOLENOID 3/4" NPT HW	1
–	114839	KIT, REPAIR VALVE 3/4" HW	A/R
–	111472	COIL, SOLENOID 3/4" 120V	A/R
4	102651	NIPPLE, 3/4" NPT X 2" LG. BRASS	A/R
5	115169	U-BOLT, 1/4-20 X 1¾" X 3" LG. (COMES WITH NUTS)	2
6	107550	VALVE, PRESSURE REGULATING 3/4" NPT BRONZE	1
7	102653	NIPPLE, 3/4" NPT X 4" LG. BRASS	A/R
8	334775	BRACKET, DH5000 INLET PLUMBING SUPPORT	1
9	110768	STRAINER, LINE 3/4" NPT BRONZE FEMALE	1
10	102444	ELBOW, STREET 3/4" NPT X 90° BRASS	1
11	100184	NIPPLE, 3/4" NPT X CLOSE BRASS	1
12	100571	UNION, 3/4" NPT BRASS	1
13	115101	CONNECTOR, MALE 1/2" NPT X 1/2" 37° FLARE BRASS	1

Fill Piping Assembly with Booster - Condensate Removal Option Model Only

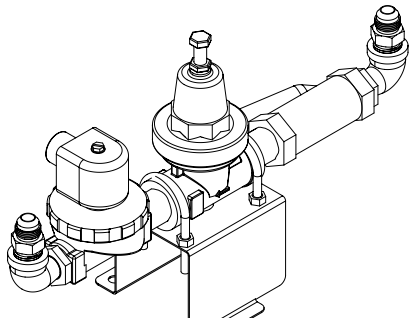

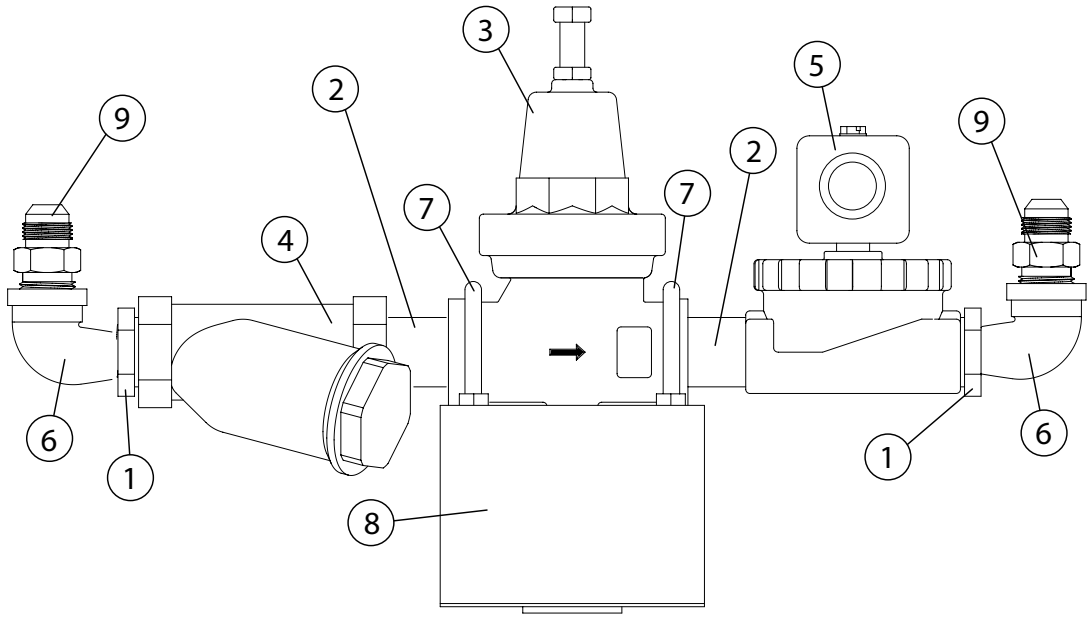

Item No.	Part No.	Description	Qty.
1	102392	BUSHING, REDUCING, 3/4" NPT X 1/2" NPT BRASS	2
2	102651	NIPPLE, 3/4" NPT X 2" LG. BRASS	2
3	107550	VALVE, PRESSURE REGULATING 3/4" NPT BRONZE	1
4	110768	STRAINER, LINE 3/4" NPT BRONZE FEMALE	1
5	111437	VALVE, SOLENOID 3/4" NPT HW	1
–	114839	KIT, REPAIR VALVE 3/4" HW	A/R
–	111472	COIL, SOLENOID 3/4" 120V	A/R
6	102438	ELBOW, STREET 1/2" NPT X 90° BRASS	2
7	115169	U-BOLT, 1/4-20 X 1¾" X 3" LG. (COMES WITH NUTS)	2
8	334775	BRACKET, DH5000 INLET PLUMBING SUPPORT	1
9	115101	COUPLING, MALE 1/2" NPT X 1/2" 37° FLARE BRASS	1

Booster Assembly - All Models and Options

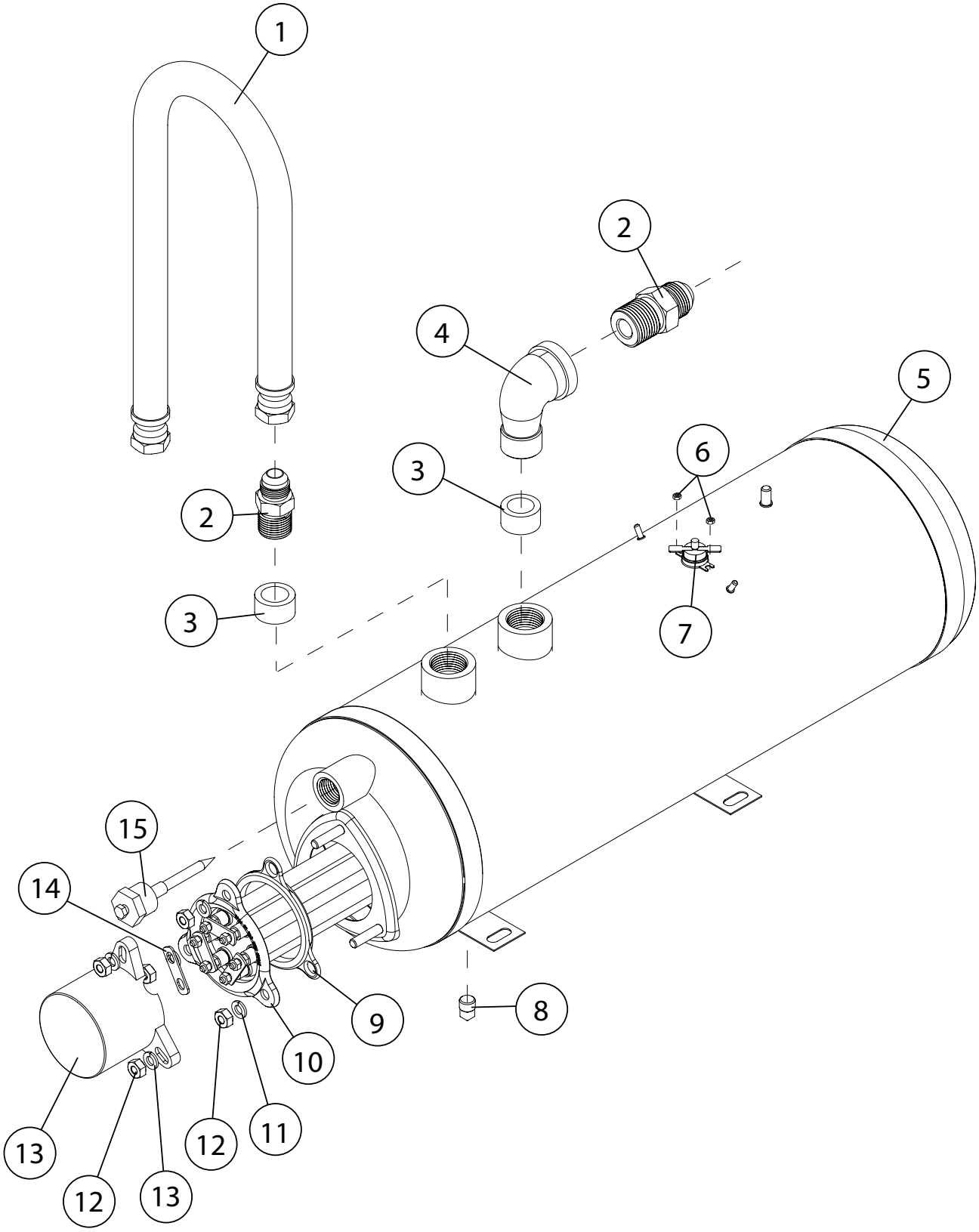

Item No.	Part No.	Description	Qty.
1	419002	HOSE ASSY. 1/2" ID, X 16" LG. FLARE JIC	1
2	115101	CONNECTOR, MALE 1/2" NPT X 1/2" 37° FLARE BRASS	2
3	100171	BUSHING, REDUCING FACE 3/4" NPT X 1/2" NPT BRASS	2
4	102438	ELBOW, STREET 1/2" NPT X 90° BRASS	1
5	0509042	BOOSTER TANK, WELDED ASSEMBLY	1
6	108954	NUT, GRIP, 6-32 W/NYLON INSERT SST	2
7	110562	THERMOSTAT, FIXED, SNAP, 240°F	1
8	100210	PLUG, 1/8" NPT SQ. HEAD, SST	1
9	109985	SEAL, ELECTRIC HEATER FLANGE	1
For Standard Model and Direct Vent Option Model			
10	111233	HEATER, 7.5KW/10KW, 208/240V/60/1PH & 3PH	1
--	108579	HEATER, 9KW, 480V/60/3PH	1
For Condensate Removal Option Model Only			
10	111232	HEATER, 10KW, 208/240V/60/1PH & 3PH	1
--	111234	HEATER, 10KW, 480V/60/3PH	1
11	106482	WASHER, LOCK 1/4" SPLIT SST	6
12	100003	NUT, PLAIN, 1/4-20 SST	6
13	107908	COVER, HEATER	1
14	111488	JUMPER, STRIP HEATER	1
15	109069	THERMOSTAT W/CAPILLARY, 110-195°F	1

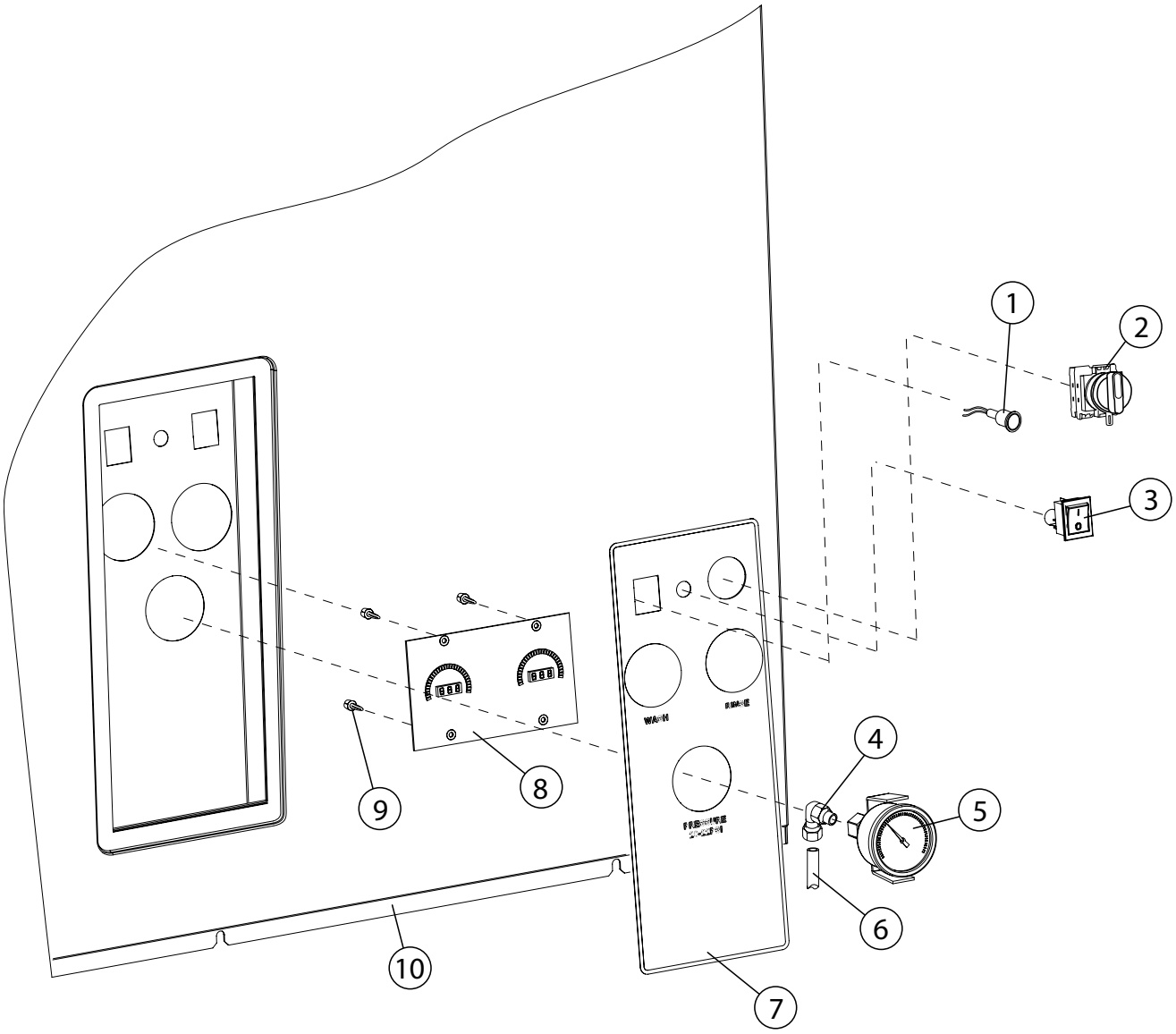
1
2
3
4
5
6
7
8
9
10
WASH
RINSE

Item No.	Part No.	Description	Qty.
1	0508551	LAMP, GREEN NEON	1
2	115049	SWITCH, ROTARY, 4-POSITON	1
3	0512220	SWITCH, ROCKER DPST, 125VAC, NEON	1
4	111100	ELBOW, 1/4" OD X 1/8" NPT FEMALE, PLASTIC	1
5	109812	GAUGE, PRESSURE, 0-60 PSI	1
6	107928	TUBING, 1/4" NATURAL P44	10 FT
7	115090	DECAL, FRONT PANEL, DH5000T (*Champion Only)*	1
–	115090-R	DECAL, FRONT PANEL, DH5000T *(Russell Only)*	1
–	115385	DECAL, FRONT PANEL, MDHH-D *(Moyer Diebel Only)*	
8	114489	GAUGE, DIGITAL TEMPERATURE DISPLAY	1
9	114559	SUPPORT, PRINTED CIRCUIT BOARD	4
10	332956	PANEL, FRONT WELDMENT	1
–	114508	CABLE ASSY., 4-CONDUCTOR *(Not Shown)* THERMISTOR TO DISPLAY CONNECT	1
–	114928	HARNESS ASSY., 10-CONDUCTOR *(Not Shown)* DISPLAY BOARD MALE HARNESS CONNECTOR	1

Control Cabinet and Input Terminal Block Assembly

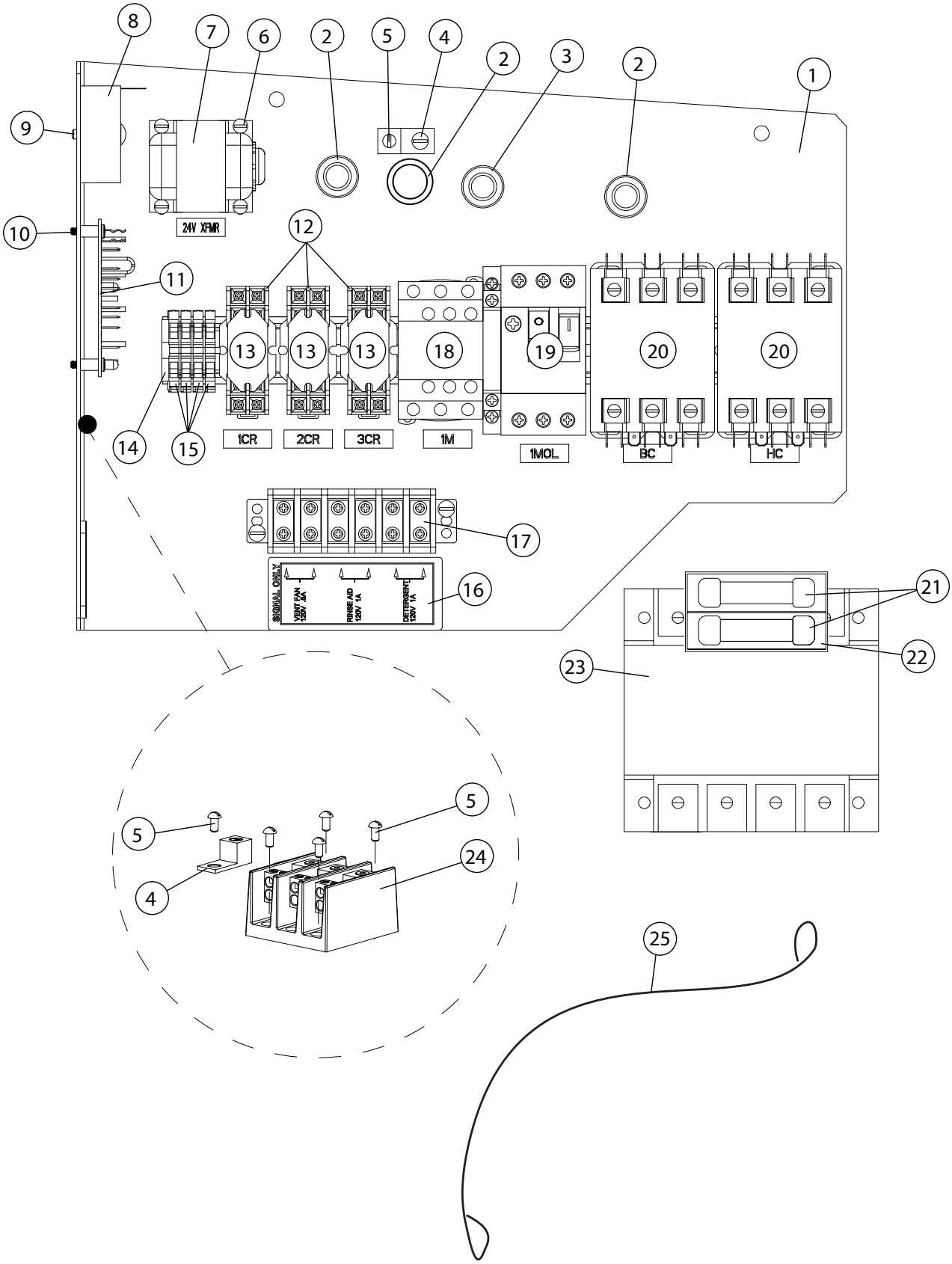

Item No.	Part No.	Description	Qty.
1	334232	INNER PANEL, CONTROL CABINET	1
2	107964	BUSHING, SNAP 7/8" D-FLAT	3
3	B500355	CONNECTOR, STRAIN RELIEF, CORD 1/2"	1
4	103310	GROUND LUG	2
5	100095	SCREW, ROUND HEAD, 10-32 X 3/8" SST	10
6	100100	SCREW, ROUND HEAD, 8-32 X 1/4" SST	4
7	114898	TRANSFORMER, 120:24V, 50/60HZ, 20VA	1
8	113314	TIMER, 600 SEC. INT., 110VAC	1
9	100211	SCREW, TRUSS HEAD, 10-32 X 1" SST	1
10	114947	SCREW, 6-32 X 5/8" SLOTTED PAN HEAD, SST	4
11	114470	TIMER BOARD	1
12	111036	SOCKET, RELAY	3
13	111068	RELAY, 2PDT 10A, 120VAC	3
14	114521	END COVER, SINGLE TERMINAL, D-MZB 1.5-NS35	1
15	114520	TERMINAL, SINGLE, MZB 1.5-NS35	4
16	114760	LABEL, DETERGENT/RINSE-AID/VENT FAN	1
17	100294	TERMINAL BLOCK, 6-POLE	1
18	108122	CONTACTOR, 12A, 3-POLE	1
19	113161	STARTER, MTR. OVERLOAD, 208-230V/60/1, 9.0-14.0A	1
–	111629	STARTER, MTR. OVERLOAD, 208-230V/60/3, 6.0-10.0A	1
–	111628	STARTER, MTR. OVERLOAD, 440-480V/60/3, 4.0-6.3A	1
20	111702	CONTACTOR, 50RA, 3-POLE, 120VAC COIL	2
21	107289	FUSE, 2.5A, 600V, TIME DELAY	2
22	114933	BLOCK, FUSE XFRMR 150VA	1
23	108397	XFRMR, INPUT 150VA, MV:120V	1
24	111833	BLOCK, INPUT TERMINAL. 175A, 3-POLE, 600V	1
25	115285	LANYARD, FRONT PANEL	1
–	114508	CABLE ASSY., 4-CONDUCTOR *(Not Shown)* THERMISTOR TO DISPLAY CONNECT	1
–	114927	HARNESS ASSY., 10-CONDUCTOR *(Not Shown)* CONTROL CABINET FEMALE HARNESS CONNECTOR	1
–	114928	HARNESS ASSY., 10-CONDUCTOR *(Not Shown)* DISPLAY BOARD MALE HARNESS CONNECTOR	1

Wash/Rinse Spray Piping - Standard Model and Direct Vent Option Model

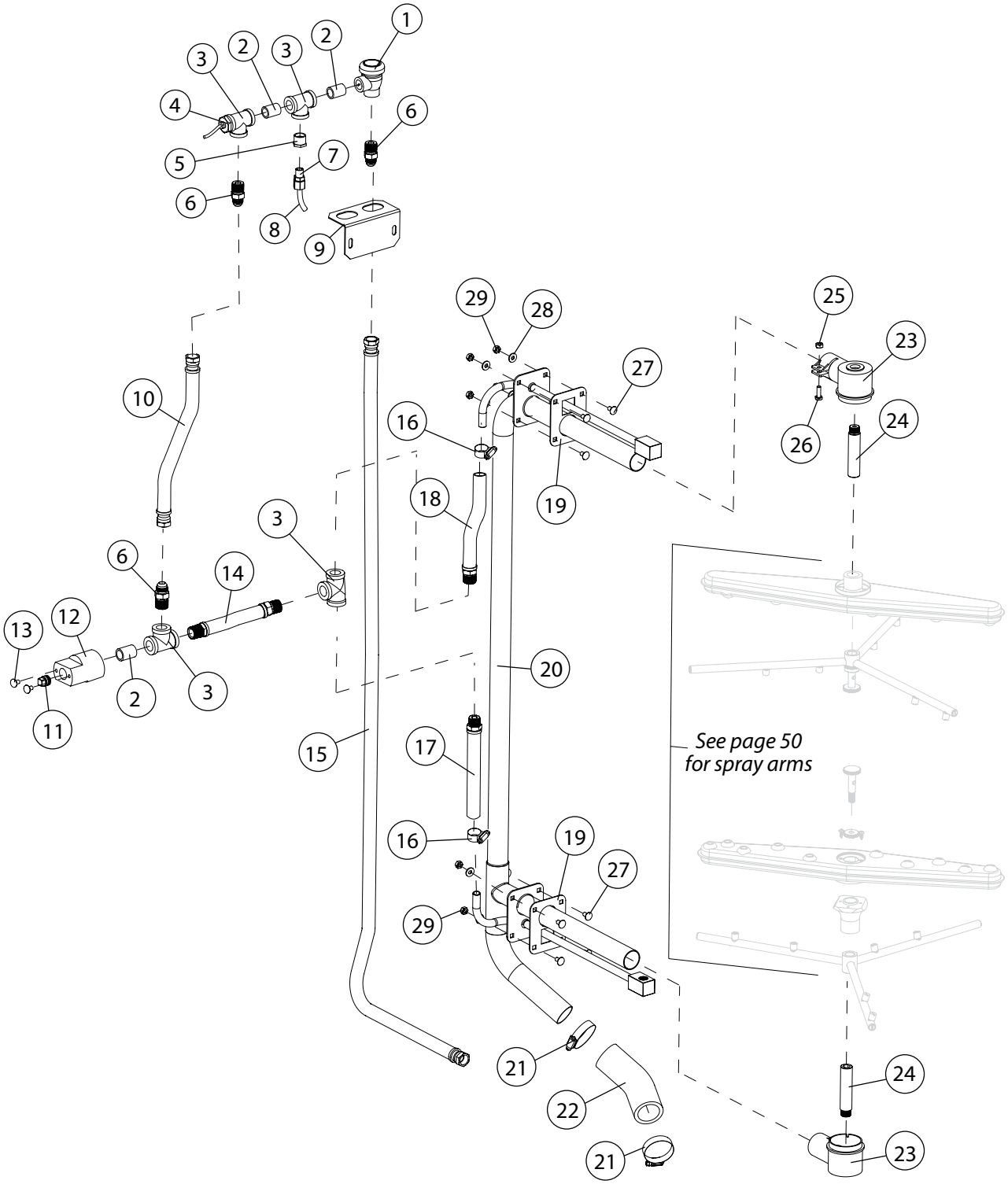

Item No.	Part No.	Description	Qty.
1	100500	BREAKER, VACUUM 1/2" NPT BRONZE	1
–	900836	KIT, REPAIR VACUUM BREAKER 1/2"	A/R
2	100209	NIPPLE, 1/2" NPT X CLOSE BRASS	3
3	102514	TEE, 1/2" NPT BRASS	4
4	114435	THERMISTER, 10KΩ, 36" LEAD	1
5	102388	BUSHING, REDUCING 1/2" NPT X 1/4" NPT BRASS	1
6	115101	CONNECTOR, MALE 1/2" NPT X 1/2" 37° FLARE BRASS	3
7	107065	ADAPTER, 1/4" OD X 1/4"MPT PLASTIC	1
8	107928	TUBING, 1/4" NATURAL P44	10 FT
9	334741	BRACKET, VACUUM BREAKER PIPING	1
10	419011	HOSE ASSY, 1/2" ID X 10-3/4" LG. FLARE JIC	1
11	101259	PLUG, 1/8" NPT SQ. HEAD, BRASS	1
12	115333	FITTING, RINSE AID SST	1
13	100007	SCREW, 10-32 X 3/8" TRUSS HD. SST	2
14	419281	HOSE ASSY., 1/2" ID X 4" LG. FLARE JIC	1
15	419010	HOSE ASSY., 1/2" ID X 56" LG. FLARE JIC	1
16	105994	CLAMP, HOSE M10 SST GEAR-TYPE	2
17	419008	HOSE ASSY., 1/2" ID X 22" LG. FLARE JIC	1
18	419001	HOSE ASSY., 1/2" ID X 12" LG. FLARE JIC	1
19	114902	GASKET, STANDPIPE WASH	2
20	334609	MANIFOLD, WELDMENT WASH CENTER	1
21	107340	CLAMP, HOUSE M28 SST GEAR-TYPE	2
22	115159	HOSE, DISCHARGE	1
23	109864	HUB SUPPORT, WASHARM	2
24	0507445	SPINDLE, WASHARM	2
25	107967	NUT GRIP, 1/4-20 W/NYLON INSERT	2
26	100736	BOLT, HEX HD., 1/4-20 X 3/4" SST	2
27	114154	BOLT, CARRIAGE, 1/4-20 X 1/2" SST	8
28	106026	WASHER, FLAT 1/4" SST	8
29	100003	HEX PLAIN NUT 1/4-20 SST	8

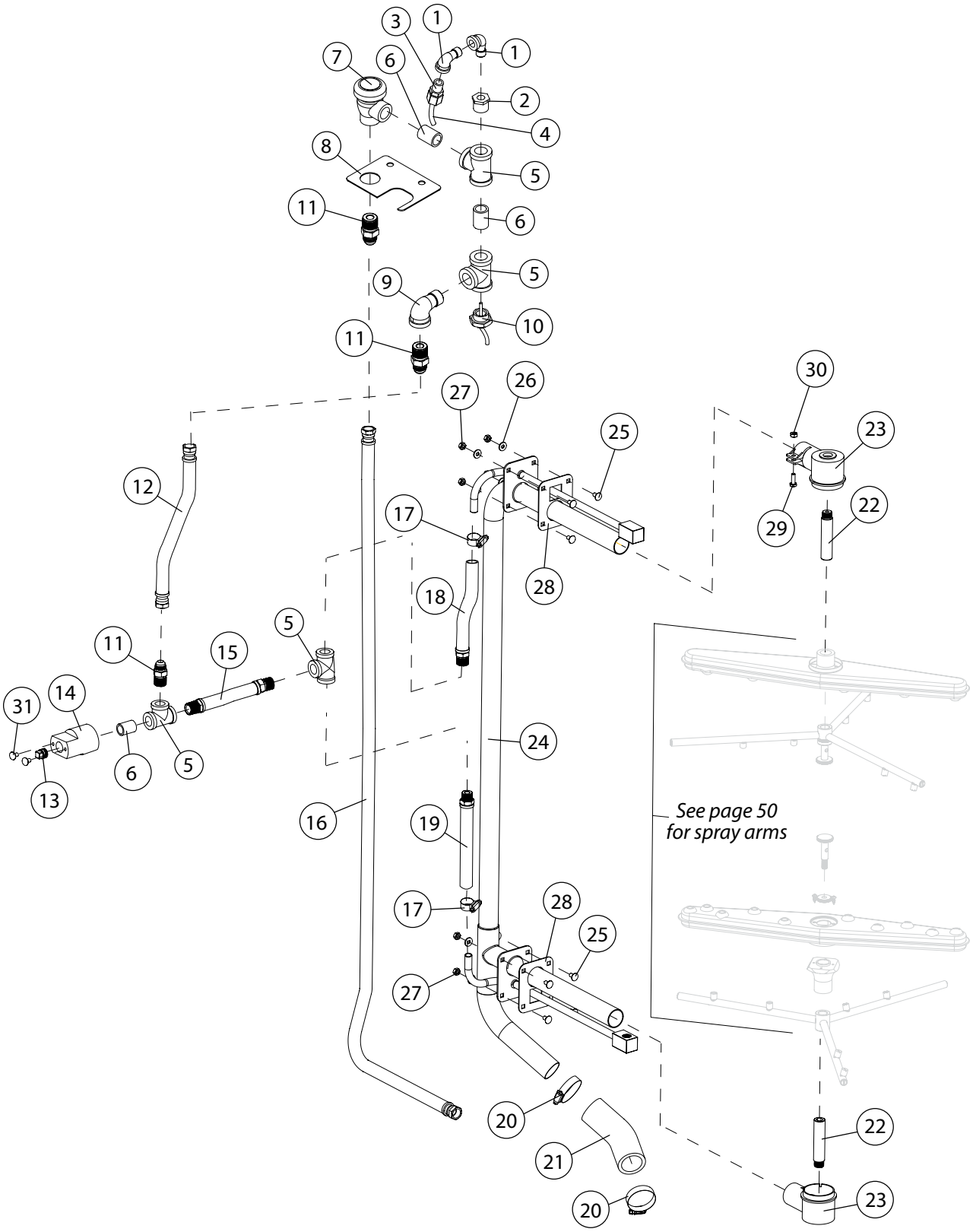

Refer to Pages 64-65 for the
Condensate Removal Option - Shroud, Fan, and Coil Assembly Parts List

Item No.	Part No.	Description	Qty.
1	101261	ELBOW, STREET 1/4" NPT X 90° BRASS	2
2	102388	BUSHING, REDUCING 1/2" NPT X 1/4" NPT BRASS	1
3	107065	ADAPTER, 1/4" OD X 1/4"MPT PLASTIC	1
4	107928	TUBING, 1/4" NATURAL P44	10 FT
5	102514	TEE, 1/2" NPT BRASS	4
6	100209	NIPPLE, 1/2" NPT X CLOSE BRASS	1
7	100500	BREAKER, VACUUM 1/2" NPT BRONZE	1
–	900836	KIT, REPAIR VACUUM BREAKER 1/2"	A/R
8	334681	BRACKET, PIPING SUPPORT, VACUUM BREAKER	1
9	102438	ELBOW, STREET 1/2" NPT X 90° BRASS	1
10	114435	THERMISTER, 10KΩ, 36" LEAD	1
11	115101	CONNECTOR, MALE 1/2" NPT X 1/2" 37° FLARE BRASS	3
12	419011	HOSE ASSY, 1/2" ID X 10-3/4" LG. FLARE JIC	1
13	101259	PLUG, 1/8" NPT SQ. HEAD, BRASS	1
14	115333	FITTING, RINSE AID SST	1
15	419281	HOSE ASSY., 1/2" ID X 4" LG. FLARE JIC	1
16	419010	HOSE ASSY., 1/2" ID X 58" LG. FLARE JIC	1
17	105994	CLAMP, HOSE M10 SST GEAR-TYPE	2
18	419001	HOSE ASSY., 1/2" ID X 12" LG. FLARE JIC	1
19	419008	HOSE ASSY., 1/2" ID X 22" LG. FLARE JIC	1
20	107340	CLAMP, HOUSE M28 SST GEAR-TYPE	2
21	115159	HOSE, DISCHARGE	1
22	0507445	SPINDLE, WASHARM	2
23	109864	HUB SUPPORT, WASHARM	2
24	334609	MANIFOLD, WELDMENT WASH CENTER	1
25	114154	BOLT, CARRIAGE, 1/4-20 X 1/2" SST	8
26	106026	WASHER, FLAT 1/4" SST	8
27	100003	HEX PLAIN NUT 1/4-20 SST	8
28	114902	GASKET, STANDPIPE WASH	2
29	107967	NUT GRIP, 1/4-20 W/NYLON INSERT	2
30	100736	BOLT, HEX HD., 1/4-20 X 3/4" SST	2
31	100007	SCREW, 10-32 X 3/8" TRUSS HD. SST	2

Refer to Pages 64-65 for the
Condensate Removal Option - Shroud, Fan, and Coil Assembly Parts List

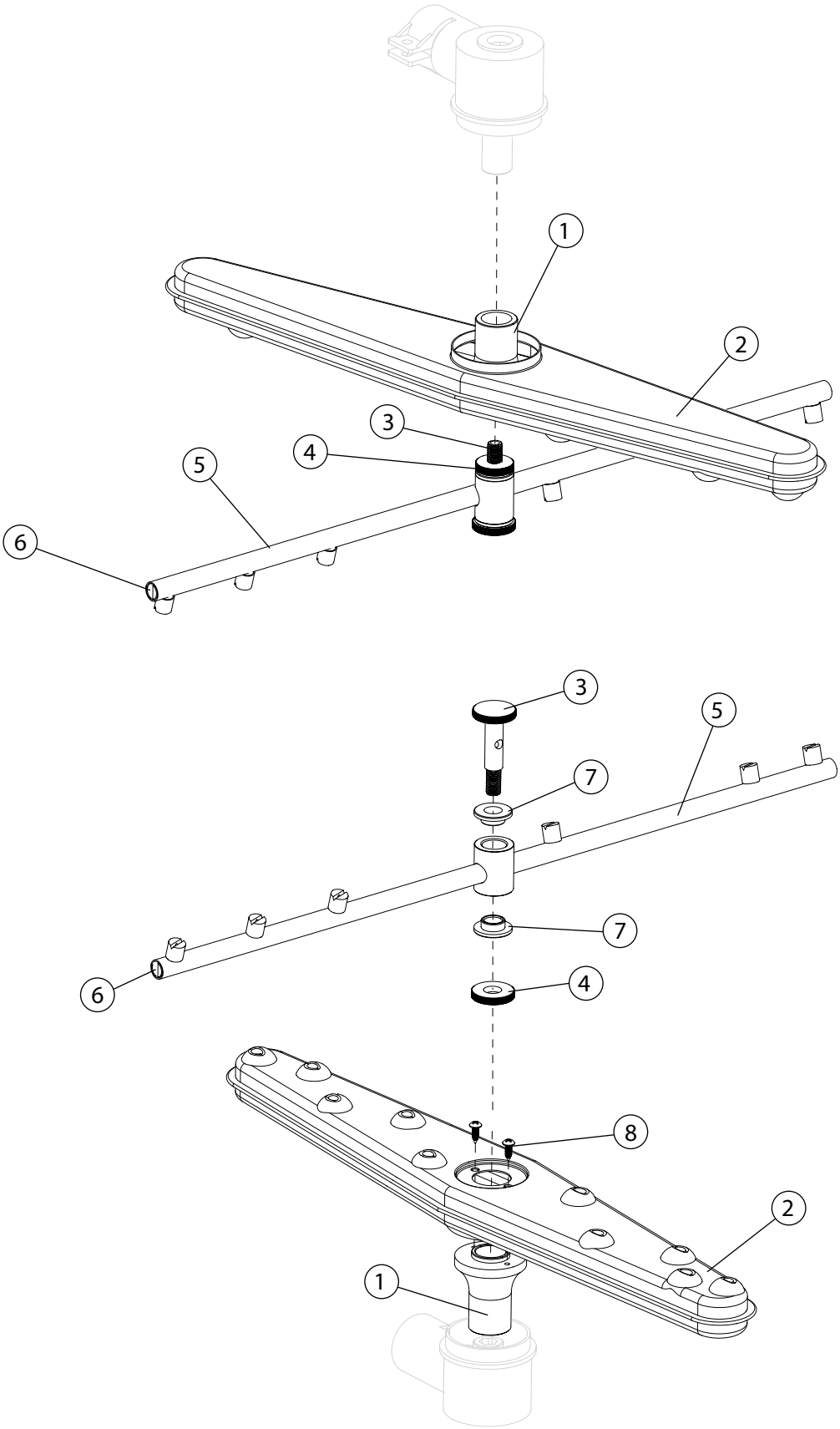
1
2
3
4
5
6
3
5
7
7
6
4
8
2
1

Item No.	Part No.	Description	Qty.
1	207096	WASHARM, BEARING	2
2	114858	WASHARM, WELDMENT	2
3	0507443	SPINDLE, RINSE ARM	2
4	114556	NUT, SPINDLE	2
5	115222	RINSE ARM, WELDMENT	2
6	114861	ENDCAP, HEADLESS, 7/16-20 SST	6
7	113514	BEARING, RINSE ARM	4
8	109835	SCREW, #8 X 1/2" SELF-TAPPING PAN HEAD, PHILLIPS	4
–	900975	RINSE ARM ASSEMBLY, COMPLETE *(includes items 5,6 and 7)*	2
–	900954	WASH ARM ASSEMBLY, COMPLETE *(includes items 1, 2, and 8)*	2

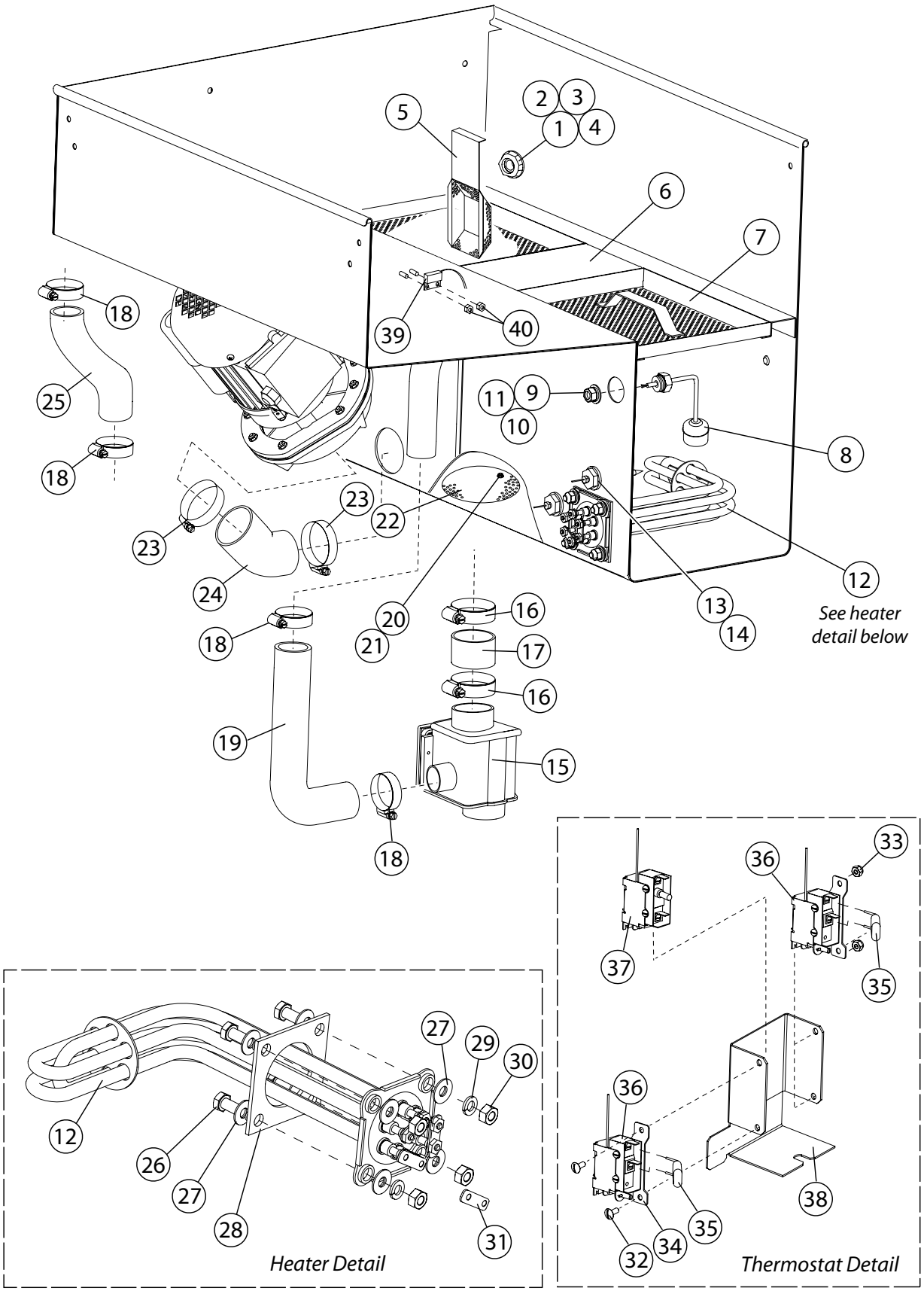
See heater detail below
Heater Detail
Thermostat Detail

Item No.	Part No.	Description	Qty.
1	109034	GASKET, 1/2" PLUG	1
2	108417	NUT, 1/2" NPT PLASTIC	1
3	108418	PLUG, 1/2" NPT PLASTIC	1
4	114386	WASHER, RUBBER 13/16" X 1-1/4" X 1/8"	1
5	333021	SCREEN, PUMP SUCTION	1
6	332544	SUPPORT, FILLER SCREEN	1
7	305164	SCREEN, SCRAP	2
8	111092	SWITCH, FLOAT	1
9	107089	NUT, JAM, 1/2-13	1
10	104882	WASHER, FLAT	2
11	107589	WASHER, LOCK, 1/2" SPLIT SST	1
12	114178	ELEMENT, HEATER 5.2 kW, 208-240-380/60/1-3, 90°	1
–	114179	ELEMENT, HEATER 5.2 kW, 480/60/3, 90°	1
13	201029	LOCKNUT, 1/2" NPT NP	2
14	201041	WASHER, SPACER 7/8"X 1-3/16" X 1/8"	2
15	114471	VALVE, DRAIN, ELECTRIC W/COVER	1
16	104165	CLAMP, HOSE M40 SST W/CS SCREW	2
17	205990	HOSE, DRAIN 2" ID X 1-9/16" LG.	1
18	107340	CLAMP, HOSE M28 SST W/CS SCREW	4
19	114472	HOSE, OVERFLOW, 90°	1
20	107967	NUT, GRIP 1/4-20 SST W/NYLON INSERT	1
21	106026	WASHER, FLAT 1/4-20 SST	1
22	304816	STRAINER, DRAIN, 6" DIA.	1
23	104203	CLAMP, HOSE M52 SST W/CS SCREW	2
24	114467	HOSE, SUCTION	1
25	115159	HOSE, DISCHARGE	1
26	100740	BOLT, HEX 5/16-18 X 1" SST	4
27	102376	WASHER, FLAT 5/16" SST	4
28	108345	GASKET, ELEMENT, 3" X 3" X 1/8" X 2" HOLE	1
29	106013	WASHER, LOCK SPLIT, 5/16" SST	4
30	100154	NUT, PLAIN, 5/16-18 SST	4
31	111488	JUMPER, STRIP *(spare for conversion)*	3
32	100097	SCREW, TRUSS HD., 10-32 X 1/2" SST	6
33	107966	NUT, GRIP, 10-32 X 1/2" SST	6
34	322076	BRACKET, DUAL THERMOSTAT MOUNTING	3
35	113271	SUPPRESSOR, ARC, .01µF, 47Ω	2
36	109069	THERMOSTAT, CONTROL 110-195°F	2
37	110561	THERMOSTAT, FIXED HI-LIMIT 240°F, (WASH TANK)	1
38	334231	BRACKET, SUPPORT THERMOSTAT	1
39	113721	SAFETY SWITCH, REED	1
40	108954	NUT, GRIP, 6-32 SST W/NYLON INSERT	2
–	113937	MAGNET, SAFETY SWITCH (NOT SHOWN)	1

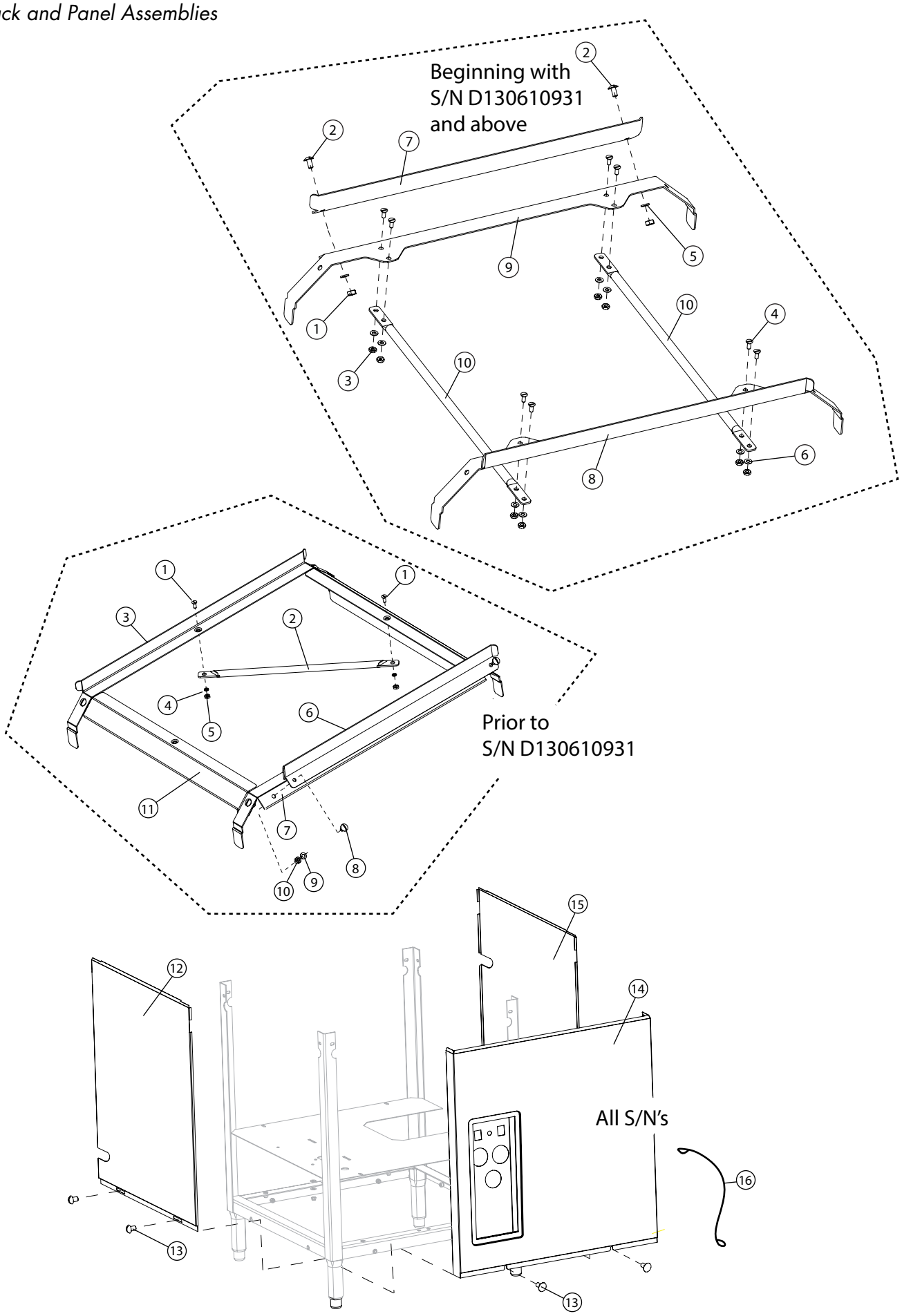
Beginning with
S/N D130610931
and above
Prior to
S/N D130610931
All S/N's

Item No.	Part No.	Description	Qty.
PRIOR TO S/N D130610931:			
1	100754	SCREW, FLAT HD., 10-32 X 1/2" SST	2
2	332025	TUBE, CROSS TRACK	1
3	332021	TRACK, REAR	1
4	106486	WASHER, LOCK #10 SPLIT, SST	2
5	104985	NUT, PLAIN, 10-32 SST	2
6	332023	TRACK, RAIL ADJUST	1
7	332022	TRACK, FRONT	1
8	100214	SCREW, TRUSS HD., 1/4-20 X 3/4" SST	6
9	106482	WASHER, LOCK 1/4" SPLIT SST	6
10	100003	NUT, PLAIN 1/4-20 SST	6
11	332024	TRACK, CROSS BAFFLE	2
BEGINNING WITH S/N D130610931 AND ABOVE:			
1	100003	NUT, HEX PLAIN 1/4-20 SST	2
2	100073	SCREW, TRUSS HEAD, 1/4-20 X 1/2" SST	2
3	100194	HEX GRIP NUT, 10-32 SST	8
4	100754	SCREW, FLAT HEAD 10-32 X 1/2" SST	8
5	106482	WASHER, LOCK 1/4 SPLIT, SST	2
6	107033	WASHER, FLAT	8
7	332023	TRACK, RAIL ADJUST	1
8	335434	TRACK, FRONT	1
9	335435	TRACK, REAR	1
10	335436	TUBE, SUPPORT TRACK	2
ALL SERIAL NUMBERS:			
12	334843	PANEL, SIDE LH	1
13	104923	SCREW, 1/4-20 X 3/8" ROUND HEAD SST	6
14	332956	PANEL, FRONT WELDMENT	1
15	334665	PANEL, SIDE RH	1
16	115285	LANYARD, FRONT PANEL	1

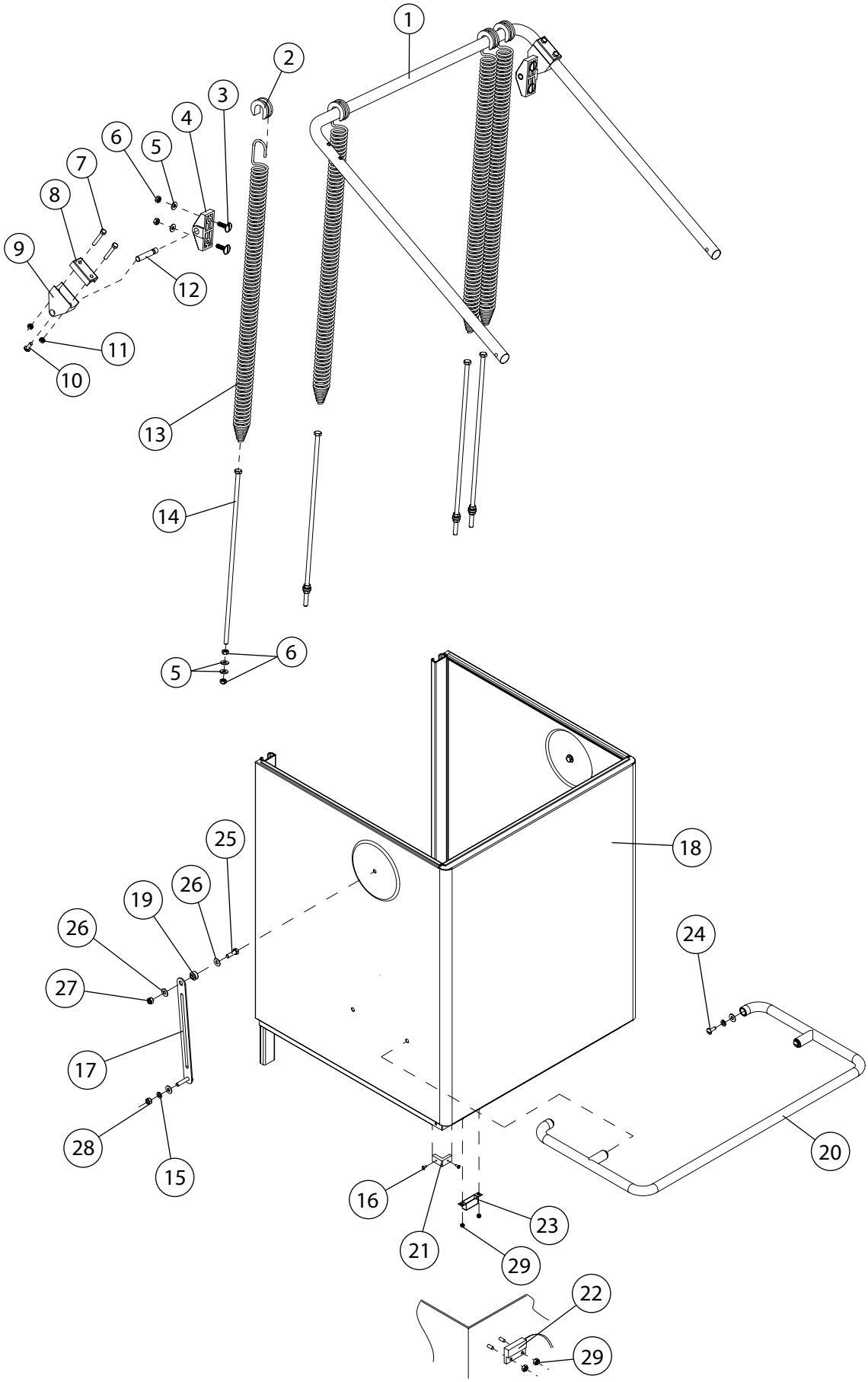
1
2
3
4
5
6
7
8
9
10
11
12
13
14
5
6
18
25
26
19
26
27
17
28
15
16
21
23
29
24
20
22
29

Item No.	Part No.	Description	Qty.
1	115089	HANDLE, HOOD	1
2	107397	BLOCK, SPRING HOOK	4
3	114865	SCREW, 1/4-20 X 1" FLAT WIDE HEAD	4
4	107399	SUPPORT, PIVOT BLOCK	2
5	106026	WASHER, FLAT 1/4" SST	12
6	100003	NUT, PLAIN 1/4-20 SST	12
7	107437	BOLT, M6 X 45MM HEX HEAD	4
8	H191014	BLOCK, UPPER PIVOT DOOR HANDLE	2
9	H191013	BLOCK, LOWER PIVOT DOOR HANDLE	2
10	107436	SCREW, M6 X 16MM, FILLISTER HEAD	6
11	107420	NUT, PLAIN M6 SST	4
12	107393	PIN, PIVOT	2
13	108066	SPRING, EXTENSION	4
14	112723	BOLT, HEX HEAD, 5/16-18 X 15" SST	4
15	106013	WASHER, LOCK 5/16-18 SPLIT SST	6
16	106382	SCREW, TRUSS HD., 6-32 X 3/8" SST	4
17	328533	LINK, WELD DOOR LIFT	2
18	334619-C	HOOD, WELDMENT *(Champion only)*	1
—	334619-R	HOOD WELDMENT *(Russell and Moyer Diebel)*	1
19	0509264	BUSHING, SIDE DOOR	2
20	115088	HANDLE, WELDMENT DOOR MOUNTED	1
21	115087	SLIDE, DOOR POST	2
22	113721	SWITCH, REED SAFETY	1
23	113937	MAGNET, SAFETY SWITCH	1
24	100214	SCREW, TRUSS HD. 1/4-20 X 3/4" SST	4
25	100740	BOLT, HEX HD., 5/16-18 X 1" SST	2
26	102376	WASHER, FLAT 5/16" SST	10
27	109009	NUT, HEX GRIP 5/16-18 SST, W/NYLON INSERT	2
28	100142-T	NUT, HEX GRIP 5/16-18 SST, TOP-LOCK	2
29	108954	NUT, GRIP, 6-32 SST W/NYLON INSERT	4

Back Support and Hood Guide Assembly

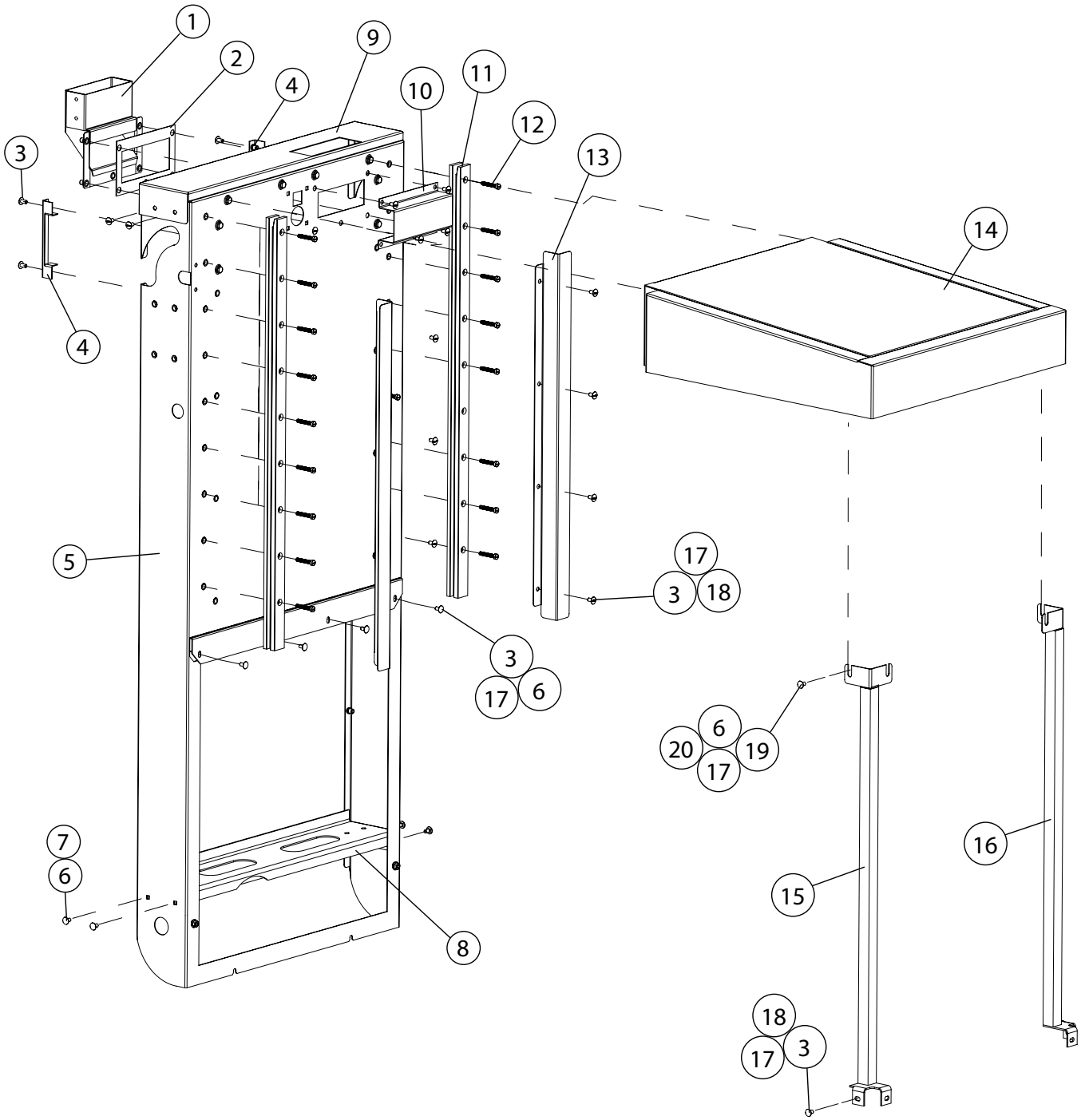

Item No.	Part No.	Description	Qty.
1	334271	DUCT, EXHAUST WELDMENT	1
2	114904	GASKET, EXHAUST DUCT	1
3	100073	SCREW, TRUSS HEAD, 1/4-20 X 1/2" SST	19
4	334657	BRACKET STOP, HANDLE	2
5	334612	SUPPORT WELDMENT, BACK	1
6	100003	NUT, PLAIN 1/4-20 SST	8
7	114154	BOLT, CARRIAGE 1/4-20 X 1/2" LG. SST	4
8	334776	BRACKET, SPRING MOUNT	1
9	334685	TOP, HOOD WELDMENT	1
10	334227	DEFLECTOR, EXHAUST	1
11	114886	GUIDE, HOOD	2
12	114866	SCREW, 1/4-20 X 1-1/2" FILLISTER HEAD SST	18
13	334621	BAFFLE, DEFLECTOR HOOD	2
14	334616	TOP, HOOD WELDMENT	1
15	334644	UPRIGHT, WELDMENT LH	1
16	334645	UPRIGHT, WELDMENT RH	1
17	106482	WASHER, LOCK 1/4" SPLIT SST	12
18	106014	NUT, ACORN PLAIN 1/4-20 SST	20
19	100735	BOLT, HEX HD. 1/4-20 X 5/8" SST	4
20	106026	WASHER, FLAT 1/4" SST	4

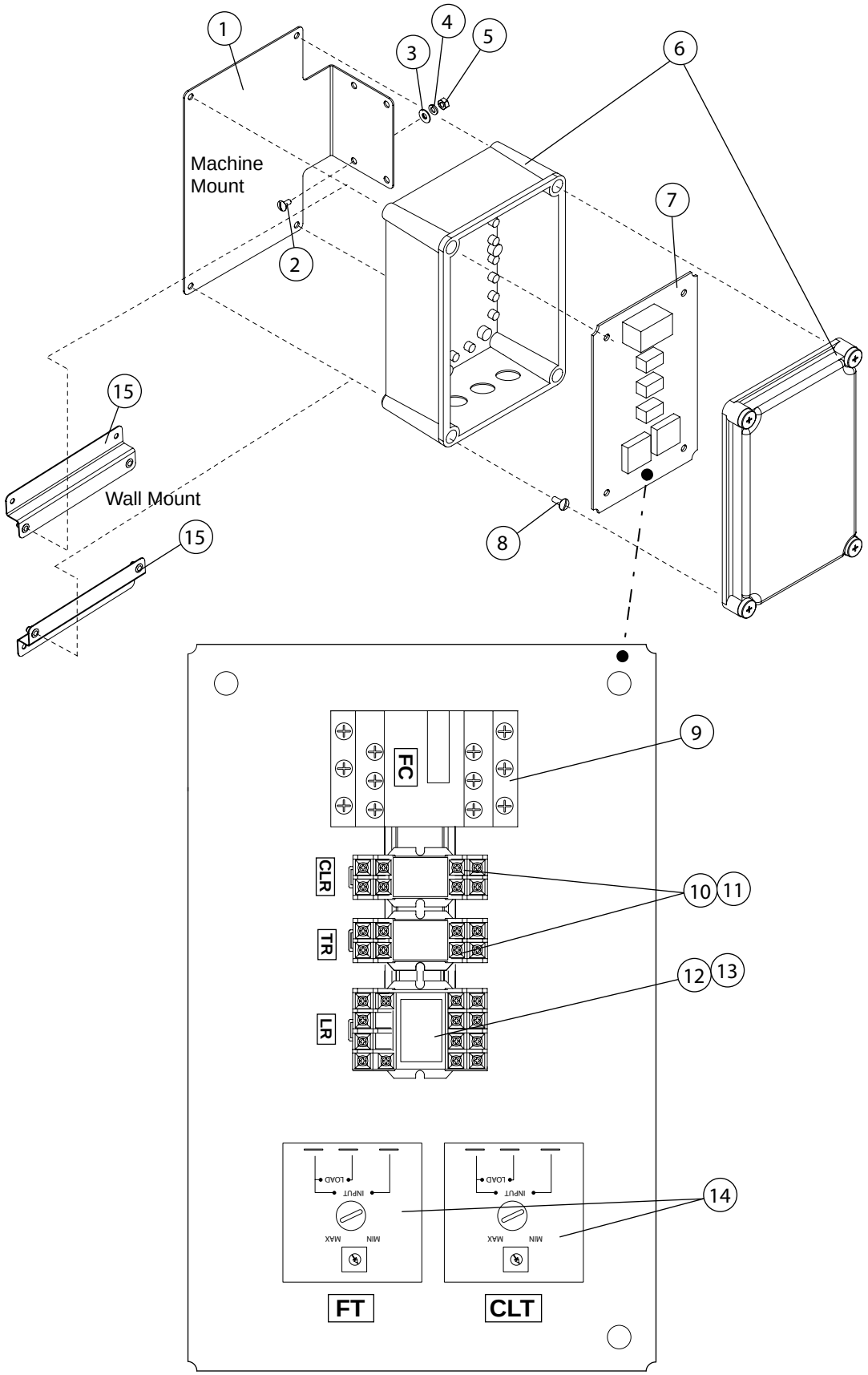
1
2
3
4
5
6
7
8
9
10
11
12
13
14
15
15
Machine Mount
Wall Mount
FC
CLR
TR
LR
INPUT
LOAD
MIN
MAX
FT
CLT

Item No.	Part No.	Description	Qty.
1	334463	BRACKET, ENCLOSURE MOUNT (MACHINE MOUNT)	1
2	100779	SCREW, 1/4-20 X 5/8" TRUSS HEAD SST	4
3	106026	WASHER, FLAT 1/4" SST	4
4	106482	WASHER, SPLIT LOCK 1/4" SST	4
5	100003	NUT, PLAIN 1/4-20 SST	4
6	114973	ENCLOSURE 11" X 7.5" X 4"	1
7	114974	PANEL, INNER	1
8	100212	SCREW, 10-32 X 3/4" TRUSS HEAD SST	4
9	108122	CONTACTOR, 12A	1
10	111068	RELAY, 2PDT, 120VAC 3A	2
—	115286	CLIP, RELAY HOLD DOWN (NOT SHOWN)	1
11	111036	SOCKET, RELAY	2
12	114980	RELAY, LATCH DPDT, 120VAC 3A	1
—	115194	CLIP, HOLD DOWN LATCH RELAY	
13	114645	SOCKET, RELAY	1
14	114981	TIMER, INTERVAL, ADJUSTABLE 1-90 SEC., 120VAC	2
15	334473	BRACKET, ENCLOSURE MOUNT (WALL MOUNT)	2

The Optional Factory Supplied Vent Fan is Sold Separately

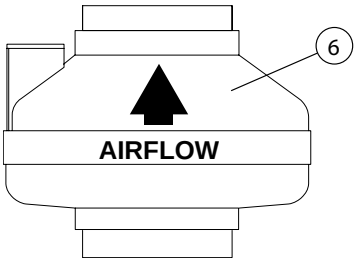

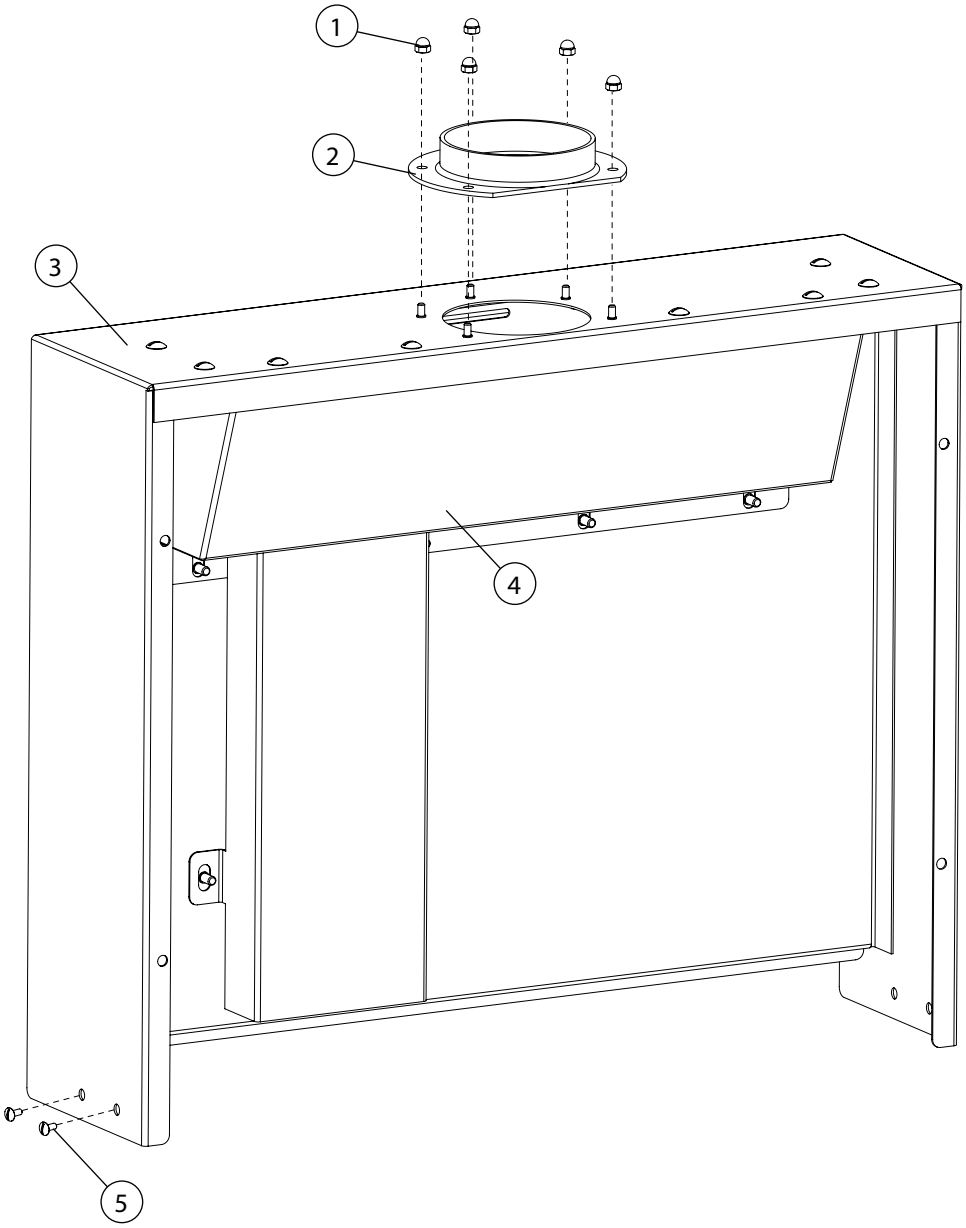

Item No.	Part No.	Description	Qty.
1	106481	NUT, ACORN PLAIN NUT, 10-32 SST	5
2	207116	RING, ANGLE 4" DUCT DIAMETER W/HOLES	1
3	334448	DIRECT VENT SHROUD WELDMENT	1
4	334451	DIRECT VENT SHROUD ENCLOSURE	1
5	100073	SCREW, 1/4-20 X 1/2" TRUSS HEAD, SST	4
6	114949	FAN, INLINE EXHAUST DUCT 6" ROUND, 120VAC	A/R

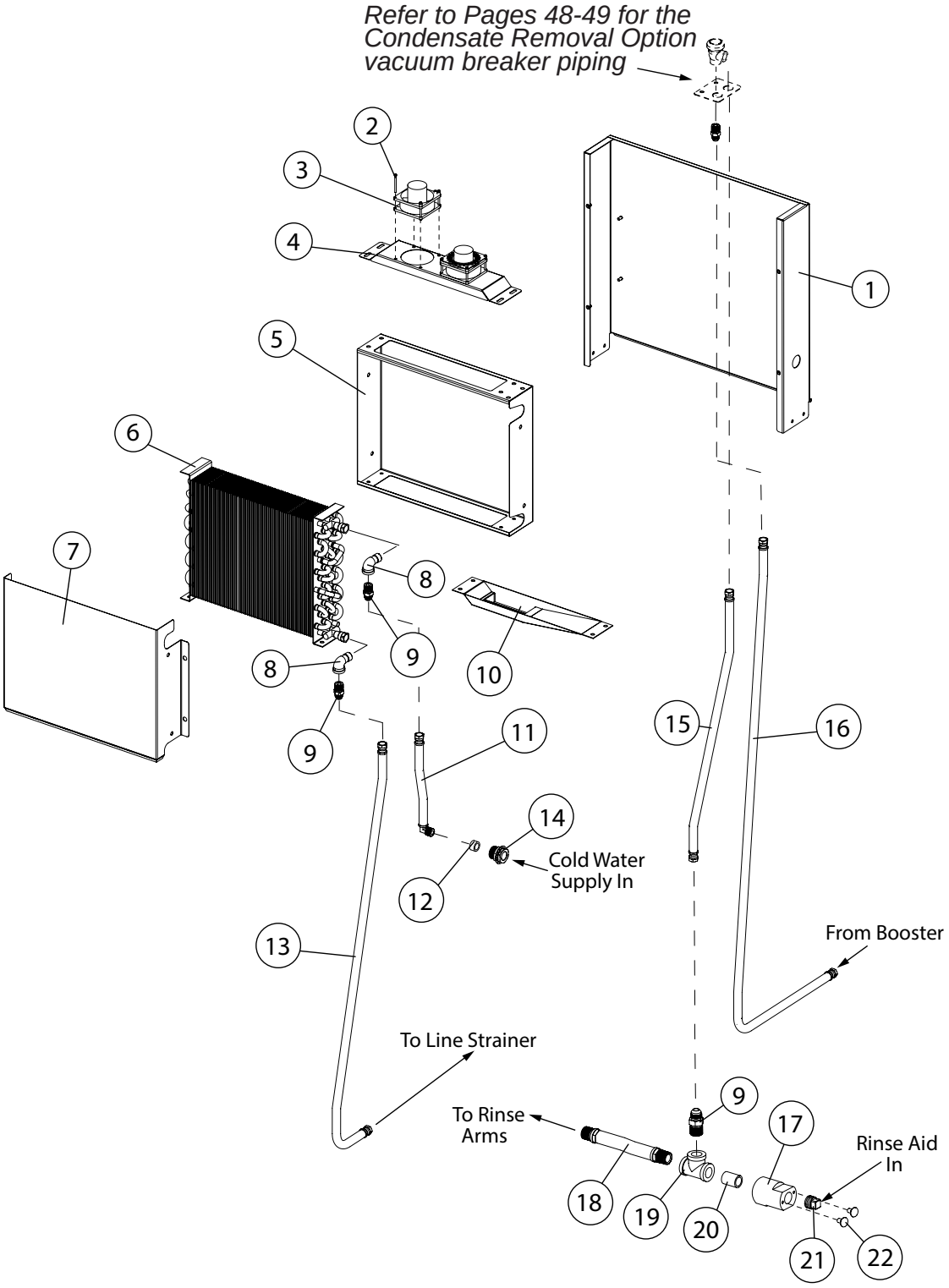
Refer to Pages 48-49 for the Condensate Removal Option vacuum breaker piping
1
2
3
4
5
6
7
8
9
8
9
10
11
12
13
14
Cold Water Supply In
15
16
From Booster
To Line Strainer
To Rinse Arms
9
17
Rinse Aid In
18
19
20
21
22

Item No.	Part No.	Description	Qty.
1	334680	BOX WELDMENT, CONDENSATE REMOVAL	1
2	114988	SCREW, FILLISTER HEAD, 8-32 X 2" SST	8
3	114976	FAN, 85 CFM AXIAL, 85-265VAC	2
4	334552	PLENUM TOP, COIL	1
5	334475	SHROUD, COIL	1
6	114931	COIL ASSEMBLY	1
7	334314	PANEL, REAR CONDENSATE REMOVAL	1
8	102438	ELBOW, STREET 1/2" NPT X 90° BRASS	2
9	115101	CONNECTOR, MALE 1/2" NPT X 1/2", 37° FLARE, JIC BRASS	3
10	334476	PAN, COIL DRAIN WELDMENT	1
11	419004	HOSE ASSY., 1/2" ID X 9¼" LG. FLARE JIC	1
12	100171	BUSHING, REDUCER FACE 3/4" X 1/2" BRASS	1
13	419012	HOSE ASSY., 1/2" ID X 60" LG. FLARE JIC	1
14	115026	COUPLING, BULKHEAD, 3/4" NPT BRASS	1
15	419005	HOSE ASSY, 1/2" ID X 36" LG. FLARE JIC	1
16	419013	HOSE ASSY., 1/2" ID X 80" LG. FLARE JIC	1
17	115333	FITTING, RINSE AID SST	1
18	419015	HOSE ASSY., 1/2" ID X 5-1/2" LG. FLARE JIC	1
19	102514	TEE, 1/2" NPT BRASS	1
20	100209	NIPPLE, 1/2" NPT X CLOSE, BRASS	1
21	101259	PLUG, 1/8" NPT SQ. HEAD, BRASS	1
22	100007	SCREW, 10-32 X 3/8" TRUSS HD. SST	2

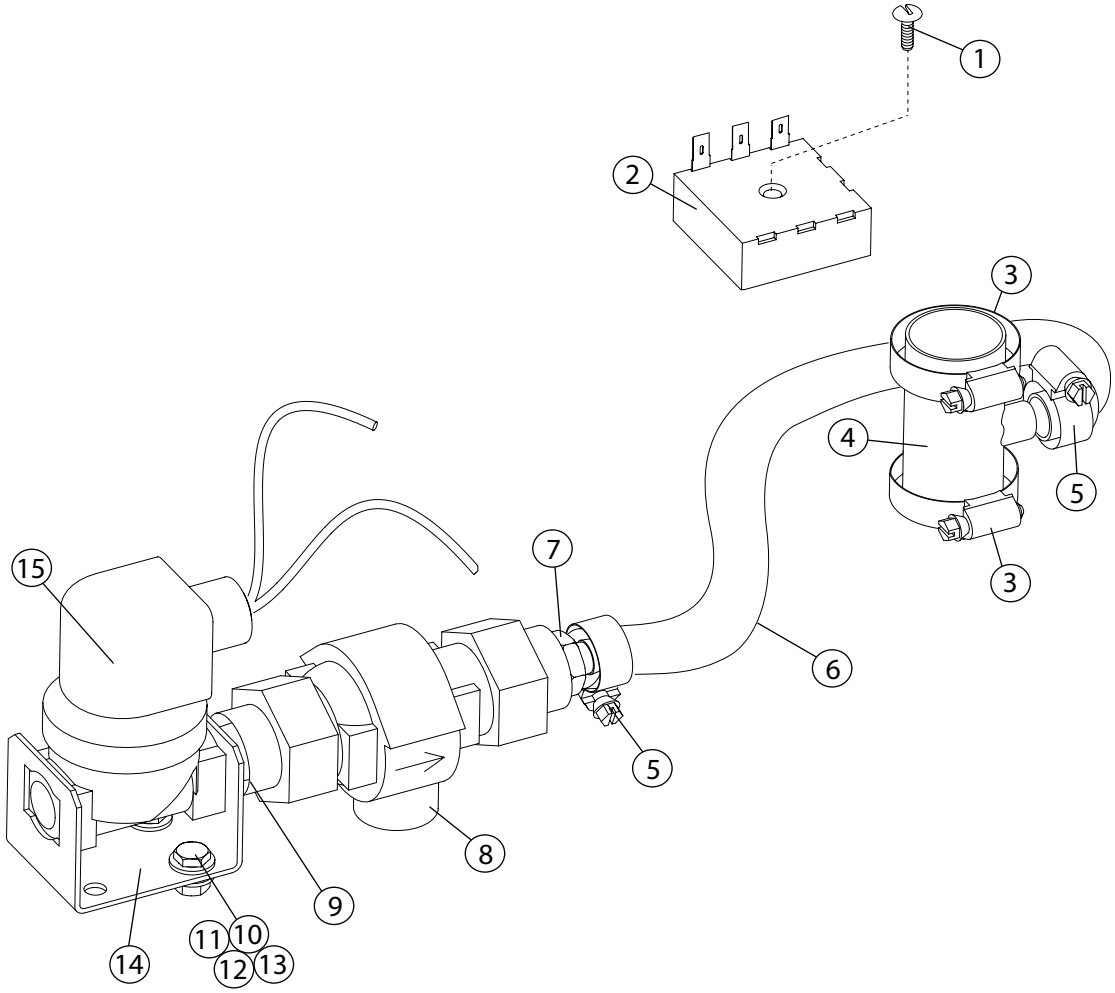
1
2
3
4
5
3
7
15
6
5
8
9
11
10
14
12
13

Item No.	Part No.	Description	Qty.
1	107564	SCREW, 6-32" X 1" TRUSS HD. SST	1
2	114662	TIMER, INFITEC 30 SECONDS	1
3	107340	CLAMP, HOSE M28 SST, GEAR-TYPE	2
4	333280	TEE, WELDMENT 1-3/8" X 1/2" BARB X 1-3/8"	1
5	105994	CLAMP, HOSE M10 SST GEAR-TYPE	2
6	107417	1/2" I.D. RUBBER, REINFORCED (CUT TO FIT)	5 FT.
7	107419	BARB, HOSE ST. 1/2" NPT X 1/2" HOSE BRASS	1
8	110551	PREVENTER, BACKFLOW 1/2" NPT BRASS	1
9	100209	NIPPLE, 1/2" NPT CLOSE BRASS	1
10	100734	BOLT, HEX HD. 1/4-20 X 1/2" SST	2
11	106026	WASHER, FLAT 1/4" SST	2
12	106482	WASHER, LOCK SPLIT 1/4" SST	2
13	100003	NUT, PLAIN 1/4-20 SST	2
14	0312146	BRACKET, VALVE FWR	1
15	109886	VALVE, SOLENOID 1/2" 120VAC COIL	1
–	109902	KIT, REPAIR 1/2" SOLENOID VALVE	A/R
–	108516	COIL, 120VAC 1/2" SOLENOID VALVE	A/R

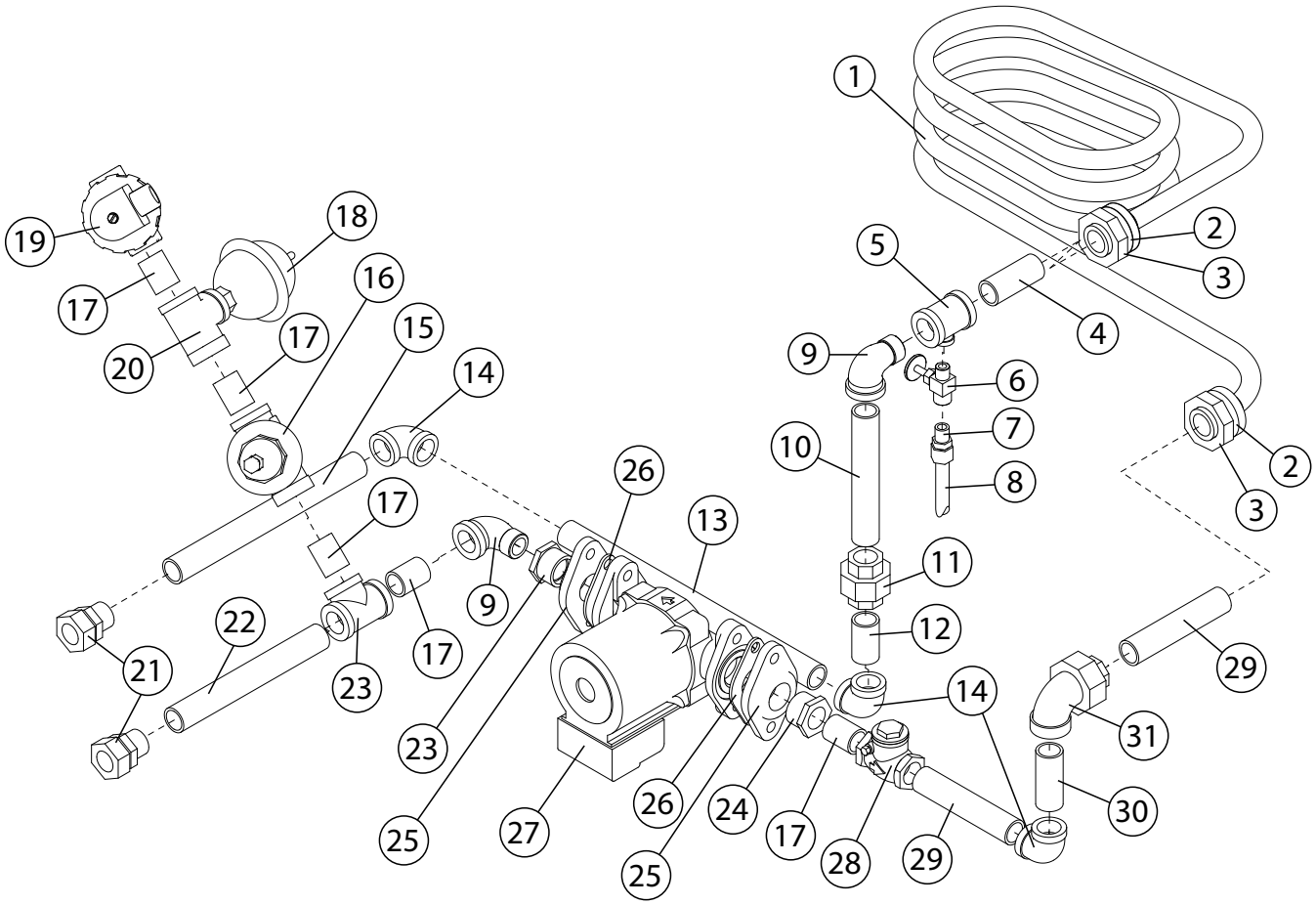
1
2
3
4
5
6
7
8
9
10
11
12
13
14
15
16
17
18
19
20
21
22
23
24
25
26
27
28
29
30
31

Item No.	Part No.	Description	Qty.
1	334640	COIL, HOT WATER	1
2	109303	GASKET	1
3	100585	LOCKNUT, 1" NPT BRASS	2
4	100461	NIPPLE, 3/4" NPT X 1-1/4" LG. BRASS	1
5	107418	TEE, REDUCING, 3/4" NPT X 3/4" NPT X 1/4" NPT BRASS	1
6	112437	VALVE, NEEDLE	1
7	107065	ADAPTER, 1/4" OD X 1/4" MPT PLASTIC	1
8	107928	TUBING, 1/4"	4 FT.
9	102444	ELBOW, STREET 3/4" NPT X 90° BRASS	2
10	102662	NIPPLE, 3/4" NPT X 6-1/2" LG. BRASS	1
11	100571	UNION, 3/4" NPT BRASS	1
12	100208	NIPPLE, RTOE 3/4" NPT X 1-3/4" LG. BRASS	1
13	102683	NIPPLE, 3/4" NPT X 13-1/2" LG. BRASS	1
14	102442	ELBOW, 3/4" NPT X 90° BRASS	3
15	102676	NIPPLE, 3/4" NPT X 10-1/2" LG. BRASS	1
16	107550	VALVE, PRESSURE REGULATING, 3/4" NPT BRASS	1
17	100184	NIPPLE, 3/4" NPT X CLOSE BRASS	4
18	104681	SILENCER, 1/2" NPT	
19	111437	VALVE, SOLENOID 3/4" NPT HW	1
—	114839	KIT, REPAIR VALVE, 3/4" HW	A/R
—	111472	COIL, SOLENOID, 3/4" 120VAC	A/R
20	102526	TEE, REDUCER 3/4" NPT X 3/4" NPT X 1/2" NPT	1
21	100571	UNION 3/4" NPT BRASS	2
22	102658	NIPPLE, 3/4" NPT X 5-1/2" LG. BRASS	1
23	102521	TEE, 3/4" NPT X BRASS	1
24	102396	BUSHING, REDUCING, 1" NPT X 3/4" NPT BRASS	2
25	111860-1	FLANGE, GRUNDFOSS PUMP	2
26	111860-2	GASKET, FLANGE GRUNDFOSS PUMP	2
27	111854	PUMP, GRUNDFOSS HW RECIRCULATOR BRONZE	1
28	100853	VALVE, CHECK 3/4" NPT BRONZE	1
29	102490	NIPPLE, 3/4" NPT X 3-1/2" LG. BRASS	2
30	102489	NIPPLE, 3/4" NPT X 2-1/2" LG. BRASS	1
31	106911	UNION, ELBOW 3/4" NPT FEMALE BRASS	1

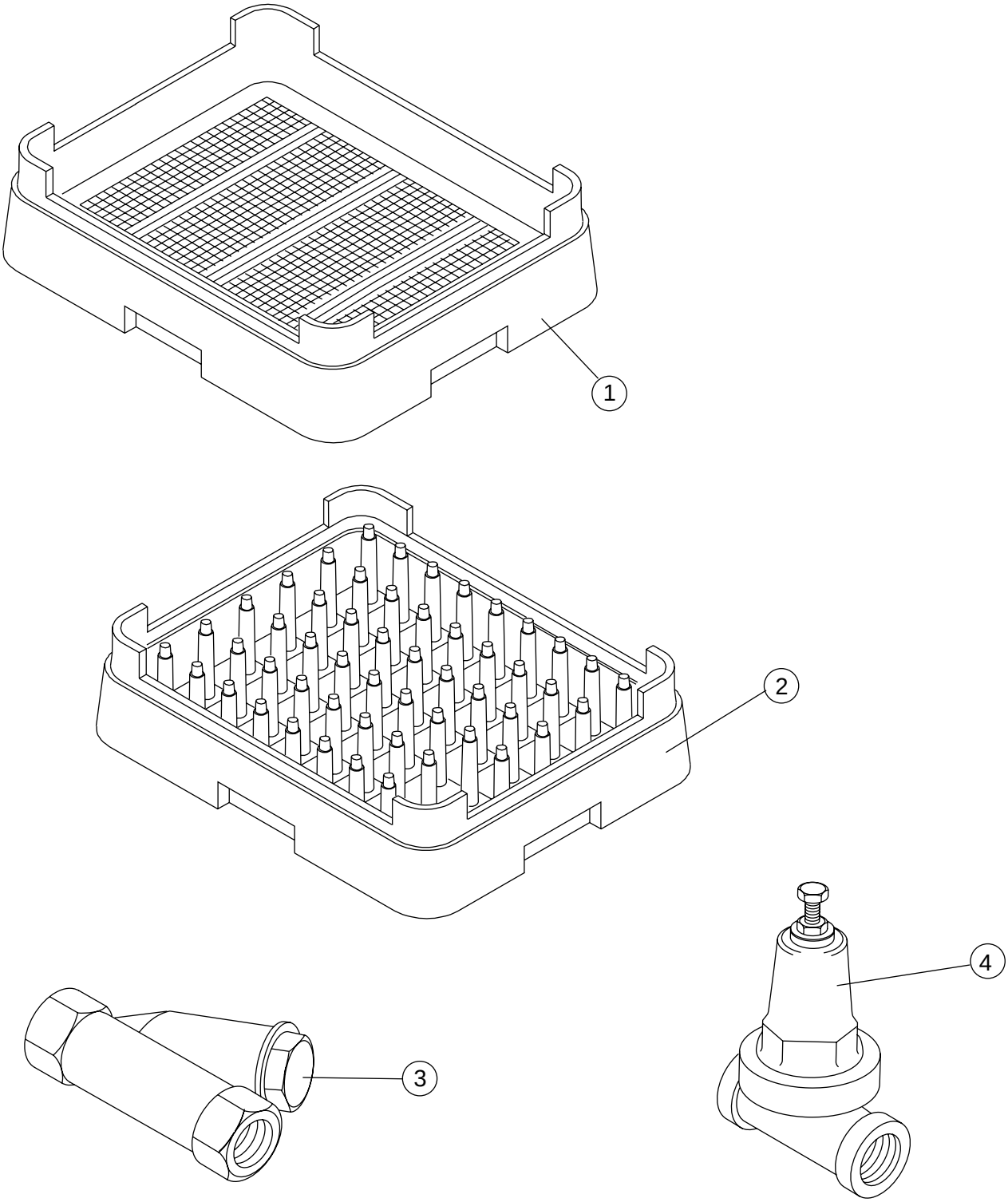
1
2
3
4

Item No.	Part No.	Description	Qty.
1	101273	DISH RACK, FLAT-BOTTOM	A/R
2	101285	DISH RACK, PEG	A/R
3	110768	STRAINER, LINE 3/4" NPT BRONZE	1
4	107550	VALVE, PRESSURE. REGULATING 3/4" NPT BRONZE	1

Temperature Display Adjustment - (For Service Technicians Only)

! WARNING !
THE INSTRUCTIONS BELOW ARE FOR AUTHORIZED SERVICE TECHNICIANS TRAINED IN THE REPAIR AND MAINTENANCE OF DISHWASHERS.

PERSONS OTHER THAN THOSE AUTHORIZED BY THE FACTORY WHO ATTEMPT THE PROCEDURES BELOW WILL VOID ALL MACHINE AND PARTS WARRANTIES.

Dishwasher Control Panel Temperature Displays
The dishwasher control panel is located on the lower panel of the dishwasher and features two digital temperature displays.

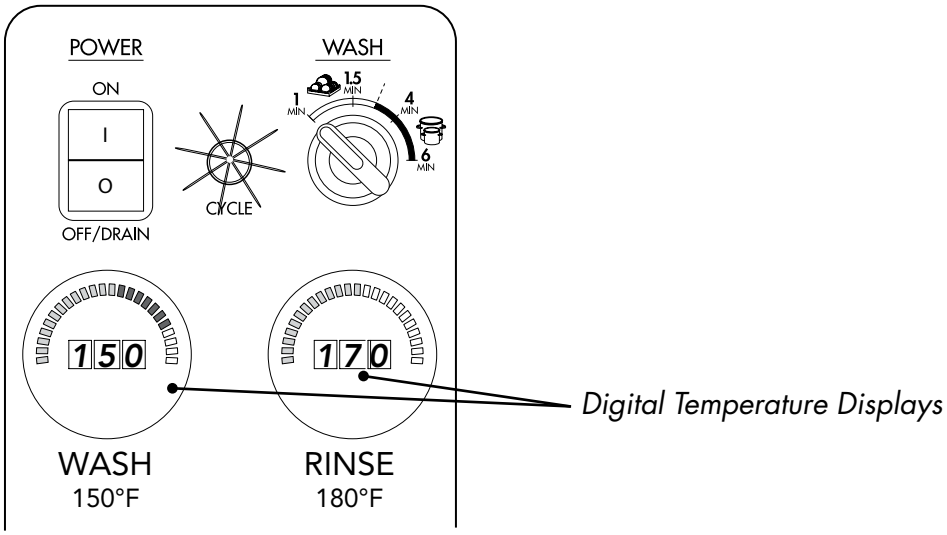

Temperature Display Operation
The temperature display is made up of 2 parts: three alpa-numeric LED's and a semi-circular segmented LED bar. The LED bar changes color from yellow to green in a left-to-right direction as temperature increases.

A display is operating correctly when the LED's indicate the temperature being measured and the bar turns green when the minimum required temperature is reached.

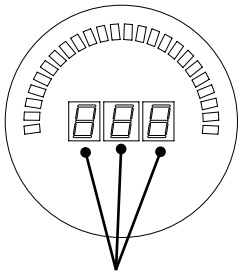

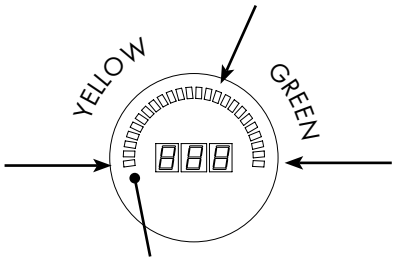

Display Operation Check

Check the operation of the display before adjusting the temperature displays.

To check the display operation:

1. Push the dishwasher power switch UP to the ON position. If the dishwasher is already ON, then push the power switch DOWN to the OFF/DRAIN position, wait 10 minutes for the machine to drain and then push the power switch up to the ON position.
2. Observe the displays on initial power up.
3. The individual segments in the Alpa-numric LEDs illuminate in a clockwise rotation.
4. All segments of the Alphanumeric LEDs illuminate to display 8's.
5. The segments in the semi-circular bars illuminate in a clockwise rotation.
6. The displays switch to normal operation and begin to display temperature.

Adjusting the Temperature Displays

WARNING:
Electrocution or serious injury may result when working on an energized circuit.

Disconnect power at the main breaker or service disconnect switch before working on the circuit.

Lock-out and tag the breaker to indicate that work is being performed on the circuit.

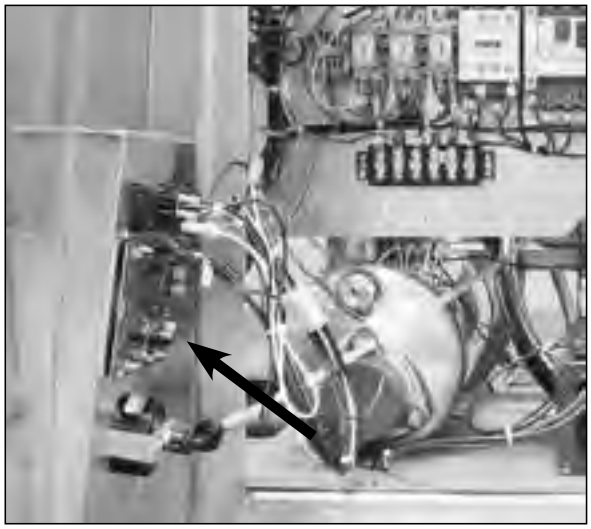

Remove front panel in order to access the back of the display board

To adjust the displays:

1. Turn the dishwasher power off.
2. Disconnect power to the machine at the main disconnect switch.
3. Remove the front panel and position it to the left as shown in the photo so the back of the display is accessible.
4. Push the dishwasher power switch UP to the ON position.

(continued on next page)

Temperature Display Adjustment - For Service Technicians Only (continued)

Adjusting the Temperature Displays *(continued)*

5. There are two displays on the front of the display board. The left displays the wash tank temperature the right displays the final rinse water temperature.

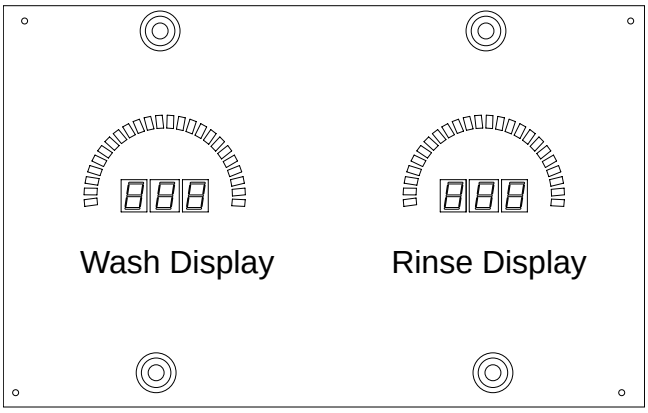

Front View of Temperature Display Board

6. The rear of the display board contains the adjustment buttons and the display board connectors. The adjustment buttons are TEST A, TEST B, CHECK and RESET.
7. There is a temperature selector switch to change the display units for °F or °C.

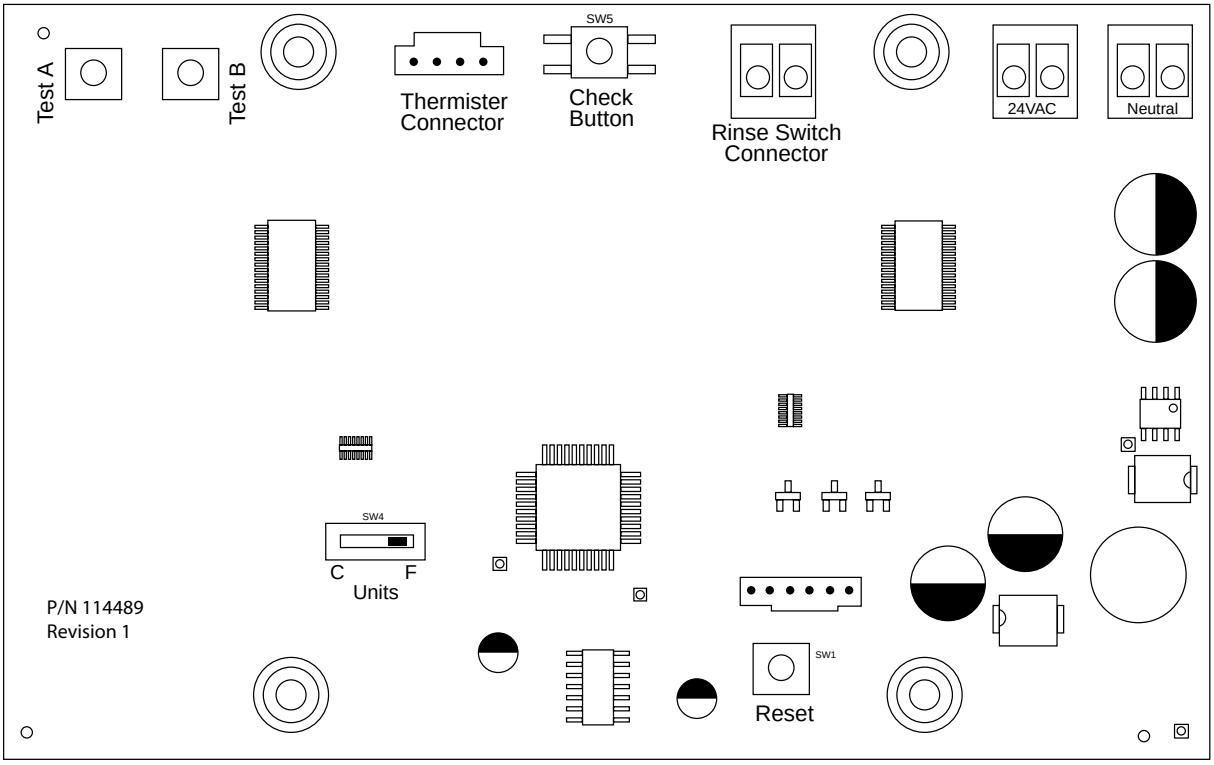

Rear View of Temperature Display Board

Temperature Display Adjustment - For Service Technicians Only (continued)

Adjusting the Temperature Displays *(continued)*

Checking Display Set-points

1. The set-point determines the way the semi-circular bar displays temperature. For example, if the set-point is 70°F/21°C, then the bar will indicate yellow beginning at zero up to 70 and change to green from 70 and beyond.
2. There are six set-point values: 70, 120, 150, 160, 165 and 180°F or 21, 49, 65, 71, 74 and 82°C depending on the position of the °F/°C unit selector switch.
3. Locate the CHECK button on the rear of the display board. It is located in the top center of the board.
4. Push and hold the CHECK button while observing the front of the display board. The wash display flashes its current set-point while the rinse display is blank.
5. Release the CHECK button and both displays indicate actual temperatures.
6. Push and Hold the CHECK button, the wash display flashes its set-point and the rinse is blank. Continue to hold the CHECK button and the wash display blanks out and the rinse display flashes its set-point.
7. Release the CHECK button and the displays indicate actual temperatures.

Changing Display Set-points

1. Push and hold the CHECK button while observing the front of the display board. As soon as the wash display flashes its current set-point, (70 in the example below),

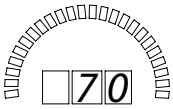

Wash Display

immediately release the CHECK button when 70 flashes; push the CHECK button again— 120 is displayed.

2. Push and release the CHECK button again and 150 is displayed. Push and release advances the set-point displayed from 70-180.
3. If the desired set-point is 150 and the current set-point is 70, then you would push and release the CHECK button two times until 150 is displayed.
4. When 150 is displayed hold the CHECK button. 150 will flash indicating that the new set-point value of 150 is set.
5. If you go past the desired set-point, then start over. There is a certain amount of timing and coordination between pushing the CHECK button and observing the display for the desired set-point. Repeat steps 1-5 until the desired set-point is entered.

Temperature Display Adjustment - For Service Technicians Only (continued)

Adjusting the Temperature Displays *(continued)*

Changing Display Set-points (continued)

6. In order to change the set-point of the rinse display, push and hold the CHECK button until the wash display flashes.
7. Continue to hold the CHECK button until the rinse display flashes and displays the current set-point then push and release the CHECK button to advance the set-point display.
8. When the desired set-point is displayed hold the CHECK button. The rinse display will flash indicating the set-point has been set.
9. The set-points for both displays are now complete.

Verifying the Alphanumeric Display

! ATTENTION !
The Temperature Display Board does not control the operation of the wash tank heater nor the booster tank heater.

The following procedure only verifies that the alphanumeric display is operating within the design parameters of the circuit board; it does not calibrate the circuit board.

1. Turn the dishwasher power off.
2. Disconnect power to the machine at the main disconnect switch.
3. Remove the front panel and position it to the left as shown in the photo on page 53 so the back of the display is accessible.
4. Disconnect the thermistor cable located at the top center of the display board.
5. Disconnect one wire from the rinse switch connector; it does not matter which one.
6. Push the dishwasher power switch UP to the ON position. The machine will fill.

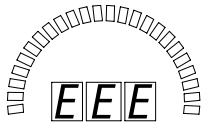	*"EEE" indicates the thermistor plug was not disconnected before verification procedure.*

(continued on next page)

Temperature Display Adjustment - For Service Technicians Only (continued)

Verifying the Alphanumeric Display (continued)

7. If the temperature displays display "EEE" this indicates that the thermistor plug was not disconnected. STOP and review steps 1-5 above.
8. Push and hold the CHECK button and the RESET at the same time.
9. Release the RESET button.
10. Release the CHECK button. Both displays flash "CAL"; the semi-circular bars are blank.

	"CAL" indicates the temperature display board is verifying its internal operation.

11. Push and hold the TEST A button. The wash display should indicate "160".
12. Release the TEST A button. The wash display should indicate "E".
13. Push the RESET button to complete the verification of the wash display.
14. Repeat steps 8-10 and then push and hold the TEST B button. The rinse display should indicate "160".
15. Release the TEST B button. The rinse display should indicate "E".
16. Push the RESET button to complete the verification of the rinse display.

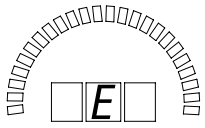	*"E" after "CAL" is displayed to indicate the verification is complete.*

17. The verification procedures are complete.
18. Turn the dishwasher power switch OFF, turn the main disconnect circuit breaker off, reconnect the thermistor plug and the rinse switch connector wire.
19. Replace the front panel and return the dishwasher to normal operation.

Display Codes and Definitions

The illustrations below show the codes that may appear on the temperature displays.

START-UP

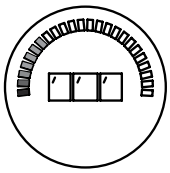

Number and bar LEDs cycle:

1. This is the Display segment test when the dishwasher power is turned ON.
   Check for defective LED segments during the test.

ERROR

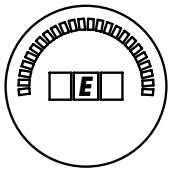

E displayed and bar is blank:

1. Thermister is open or shorted.
   Troubleshoot the thermister circuit connected to the display.

OPERATION

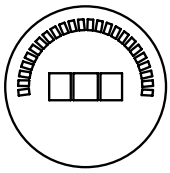

Numbers and bar are blank:

1. Main power or dishwasher OFF.
2. Tank temp. below 70°F/21°C.

Turn power OFF, then ON to check display segments.

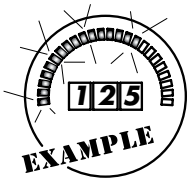

ALL Digital Displays
Numbers indicate between 70-209°F or 21-99°C; and the bar is illuminated left-to-right, from yellow to green:

1. Normal display operation.
2. Displaying temperature.

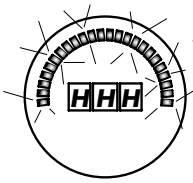

HHH displayed and entire the bar is lit:

1. The temperature in the tank has exceeded 210°F/99°C.
   Reset the hi-limit thermostat, then adjust or replace the temperature control thermostat.

NOTE:
The final rinse display may indicate a temperature less than a minimum of 180°F/82°C during the wash cycle. This is normal, but during the final rinse cycle (when the pressure gauge indicates a flowing pressure of 20-22 PSI), the final rinse temperature display will read between 180-195°F/82-91°C.

VERIFICATION

1

CAL displayed and bar is blank:

1. Display is in the verification mode.
   Press the RESET button on the display board to exit mode.

2

EEE displayed and bar is blank:

1. Display is in the verification mode but the thermister was not unplugged prior to verification.

3

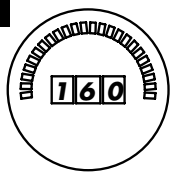

160 displayed and bar is blank:

1. Display verification in process.
   The meter should flash "E" when the TEST button is released.

4

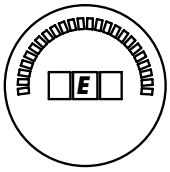

E flashes and bar is blank.

1. Verification operation is complete for the display.
   Press the RESET button on the display board to exit mode.

Tall Hood-type Series Direct Vent Option Description

! VERY IMPORTANT !
The direct vent shroud must be installed before the dishwasher is permanently placed and before the utilities are connected.
A DIRECT VENT FAN MUST BE INSTALLED TO EXHAUST AIR TO THE OUTSIDE.

The direct vent option is a stainless steel vent shroud (approximate weight 26 lbs/22 kg) and a 120VAC/60/1 vent fan supplied by the factory or an alternate fan supplied by others. The electrical connections for the vent fan are located in the direct vent electrical control box.

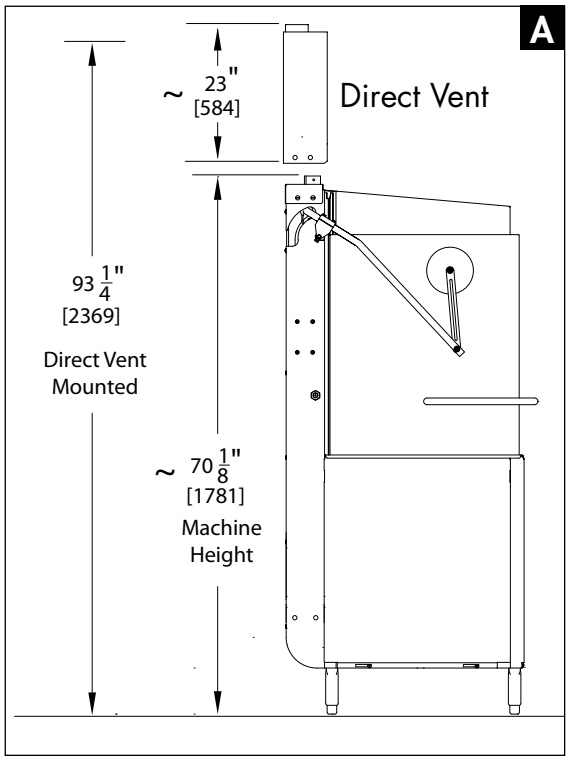

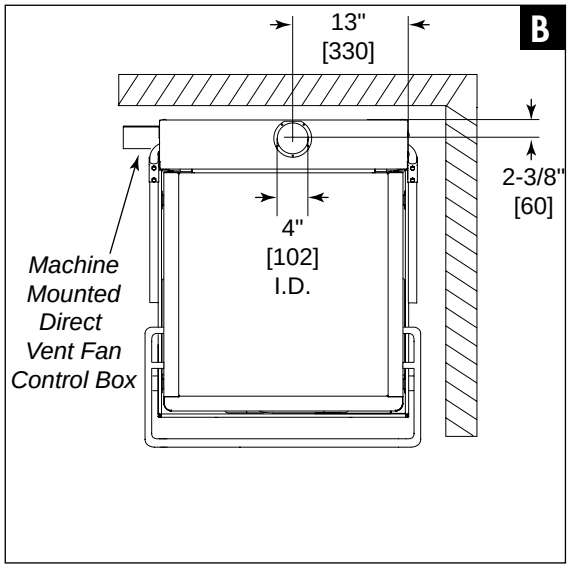

1. The direct vent shroud is mounted on the top rear of the dishwasher using (4) 1/4-20 x 1/2" SST truss head screws. *(See Figure A).*
2. The direct vent shroud must be installed before the dishwasher is permanently placed and before connecting the utilities.
3. The installation of the direct vent fan and duct work should be installed by qualified personnel.
4. The dishwasher vent connection is a round 4"[102mm] I.D. duct fitting.
5. The vent system must supply 250 CFM at 1/4" static pressure.
6. The dishwasher should be positioned in a manner which allows the dish tables and the machine to align for the proper loading and unloading of the dish racks. *(See Figure B).*

Installing the Direct Vent Shroud

1. Remove the direct vent shroud from its shipping container.
2. Refer to Figure C and note that the vent shroud has a front flange (Ca) and a rear extension (Cb) that interlock with the dishwasher vent opening.
3. Make sure (Ca) and (Cb) are properly connected to the dishwasher when the direct vent shroud is installed.

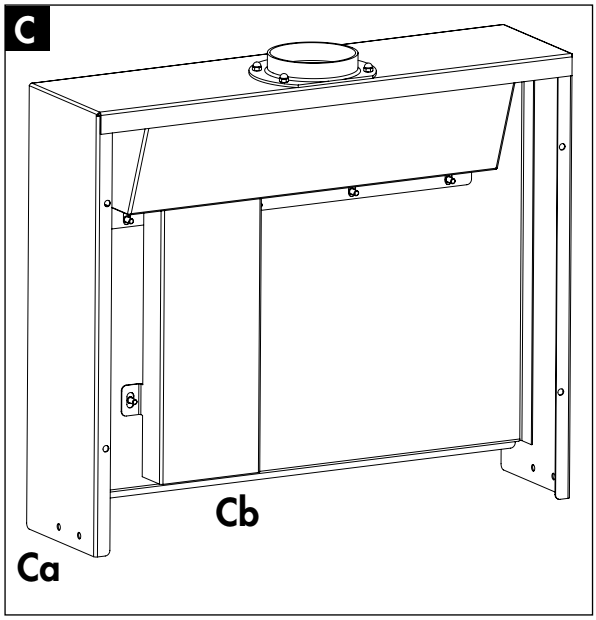

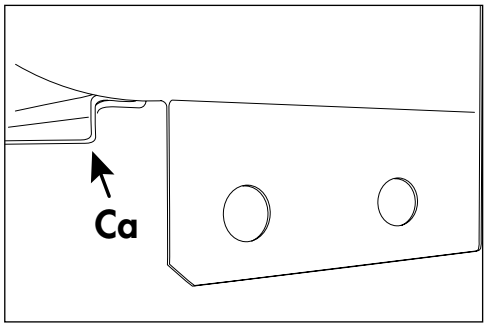

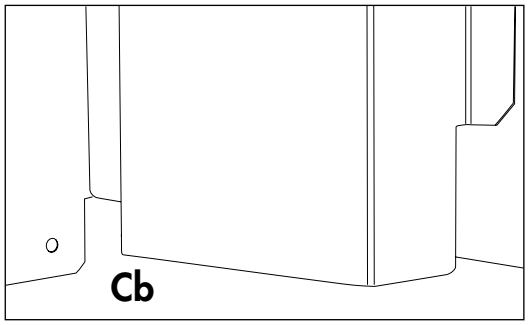

4. Two persons are needed to install the vent shroud on the dishwasher. (*See Figure D).*
5. Remove the (4) 1/4-20 x 1/2" truss head vent shroud mounting screws from the dishwasher hood.
6. Lift the vent shroud over the rear of the dishwasher and carefully lower it into position making sure that (Ca) and (Cb) connect the shroud to the dishwasher.
7. Reinstall the mounting screws.

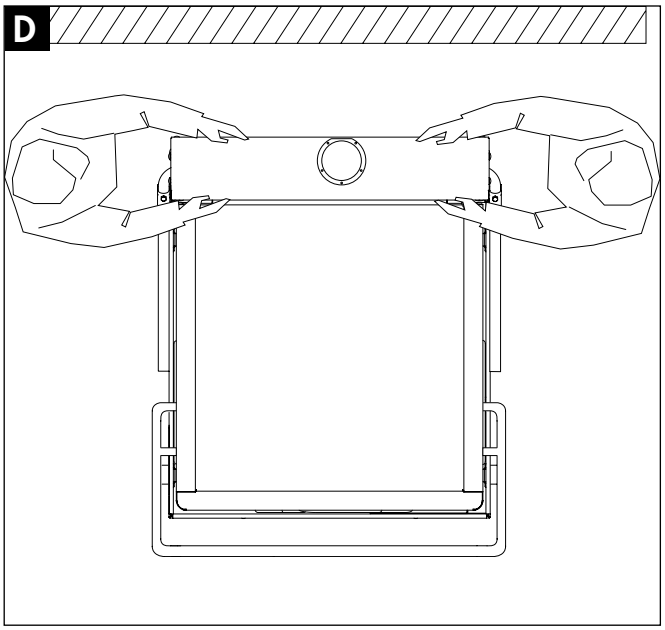

! ATTENTION !
Refer to Page 84-88 for the instructions to install a direct vent fan NOT supplied by Factory.

Installing the Optional Factory Supplied Vent Fan

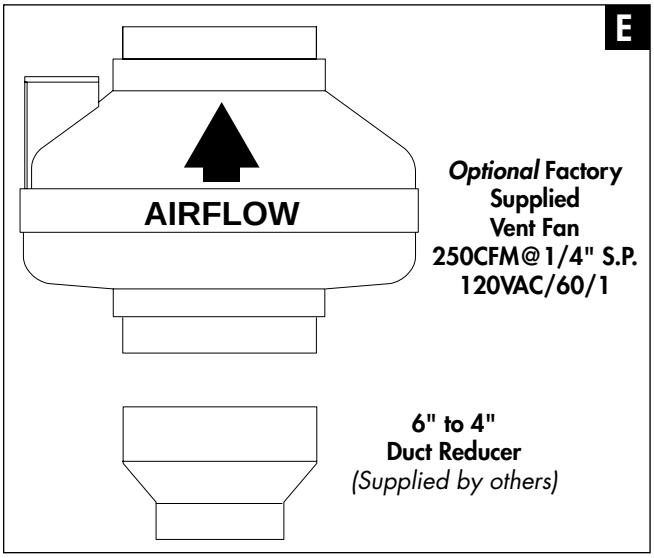

1. By request, the Factory can supply a 250 CFM, 120VAC vent fan suitable for installation as part of the direct vent option.
2. Duct work, duct reducer associated fasteners, and connectors must be supplied by others.
3. The installation of a 6" to 4" duct reducer is highly recommended as shown in Figure E.

! ATTENTION !
The vent installation must be performed by qualified personnel in accordance with all local codes and regulations.

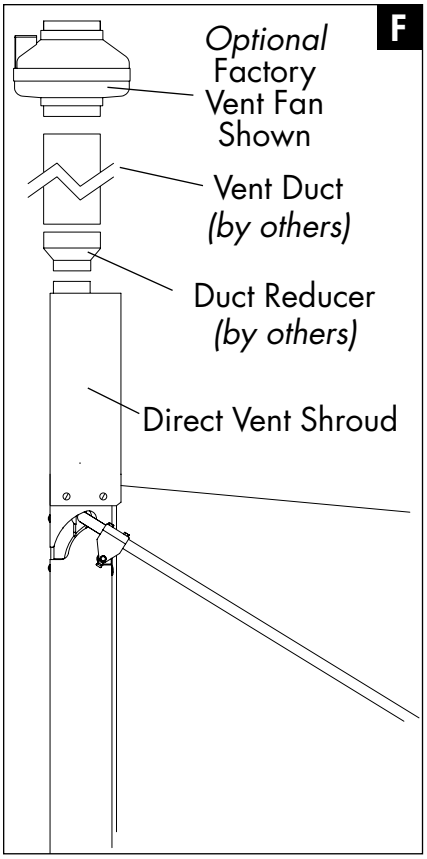

! VERY IMPORTANT !
The direct vent fan must not exhaust into a wall, ceiling, crawl space, or any other concealed space of the building nor a gas vent or any other common vent.

The direct vent fan must exhaust to the outside of the building through a separate vent duct.

4. Figure F illustrates a typical installation utilizing the optional Factory vent fan.
5. Note the orientation of the vent fan. This is the preferred orientation to eliminate moisture from collecting in the vent fan housing.
6. The length of duct and the location of the vent fan must conform to local codes and regulations.

! ATTENTION !
The Direct Vent Fan Control box can be wall-mounted using a Wall Mount Kit, P/N 900958.
See the last page of this manual for further instructions.

Installing the Direct Vent Fan Electrical Control Box on the left-hand side of the Tall Hood-type Series dishwasher.

The Direct Vent Fan Electrical Control Box is shipped prewired to the dishwasher and stowed in the left rear corner of the machine. Mounting holes and fasteners are provided to mount the control box on the left side of the machine. A 12 ft. [3.7m] vent fan cable is prewired to the control box. *(See Figure G).*

To Install the Electrical Control Box:

1. The electrical control box must be installed before the dishwasher is permanently placed and before the dishwasher tables are connected to the dishwasher.

2. Refer to Figure G at right. The photo shows the electrical control box mounted on the left side of the dishwasher approximately 46" [1.2 m] above the finished floor.

3. Note the 12 ft. [3.7 m] vent fan power cable for the Factory supplied vent fan has been prewired to the control box. This cable is provided to connect 120VAC power to the vent fan.

4. Refer to Figure H at right. The photo shows the storage location for the electrical control box during shipping.

5. Carefully lift the control box and mounting bracket assembly from the rear of the dishwasher and place it on the floor on the left-hand side of the machine.

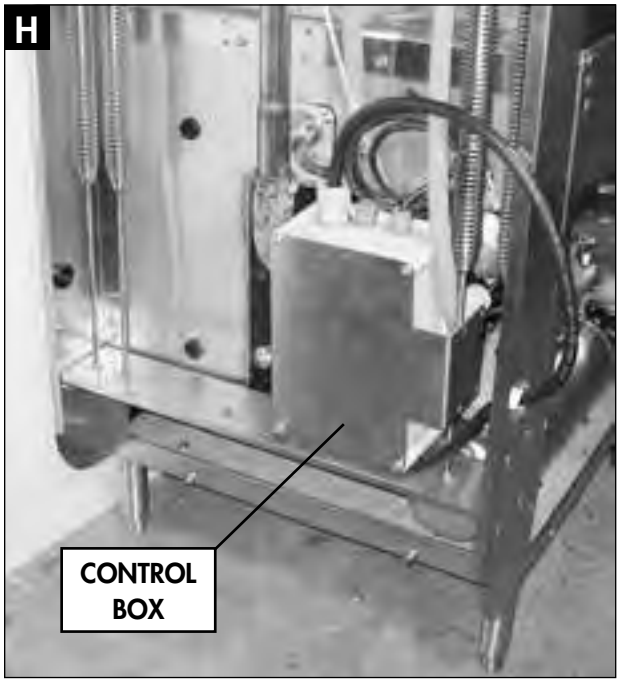

! ATTENTION !
The Direct Vent Fan Control box can be wall-mounted using a Wall Mount Kit, P/N 900958. See the last page of this manual for further instructions.

Installing the Direct Vent Fan Electrical Control Box on the left-hand side of the Tall Hood-type Series dishwasher (continued)

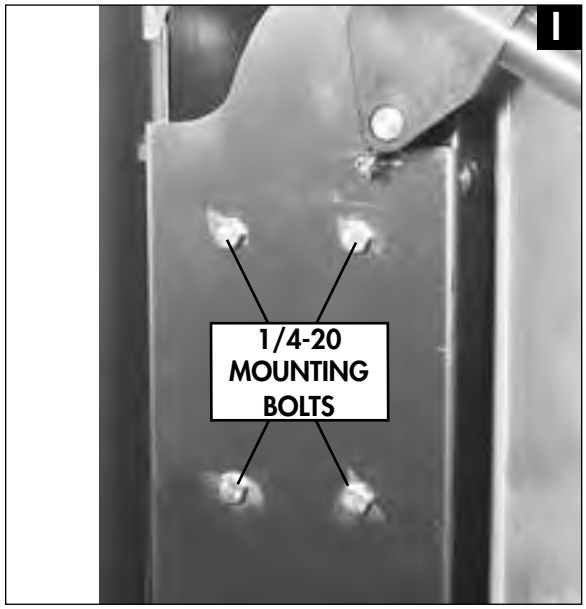

6. Locate the (4) 1/4-20 x 1/2" Hex Head bolts on the upper left rear side of the dishwasher directly below the handle bracket. *(See Figure I).*

7. Remove these bolts and set aside.

8. Carefully lift the electrical control box and mounting bracket assembly in place, align the mounting holes and reinstall the mounting bolts removed in Step 6 above. *(See Figure J below).*

9. Refer to Figure G on the previous page and note that a 12 ft. [3.7 m] vent fan cable has been prewired to the control box for the 120VAC Factory supplied vent fan.

   Route this cable from the control box to the vent fan in accordance with all local codes and regulations to complete the installation.

Electrical Connections For the Optional Factory Supplied Vent Fan on Next Page.

Electrical Connections for the Optional Direct Vent Fan ***(Supplied By The Factory)***

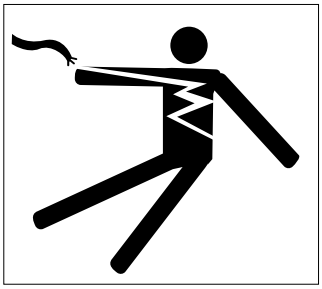

WARNING:
Electrocution or serious injury may result when working on an energized circuit.

Disconnect power at the main breaker or service disconnect switch before working on the circuit.

Lock-out and tag the breaker to indicate that work is being performed on the circuit.

! IMPORTANT !
Electrical installation must be performed by qualified personnel in accordance with all local codes and regulations or in the absence of local codes then the National Electrical Code.

DO NOT CONNECT POWER UNTIL THE FAN IS COMPLETELY INSTALLED.

1. The factory supplied vent fan is 120VAC/50-60/1.
2. Incoming power is connected to the vent fan terminal block located in the vent fan junction box on the side of the vent fan assembly. *(See Figure L).*
3. Grounding of the vent fan is not required because the fan motor is isolated within the vent fan plastic housing.
4. Connect the 120VAC power supply to the vent fan terminal block. *(See Figure M).*
5. If the 12 ft. [3.7 m] vent fan cable supplied with the direct vent fan control box is not long enough for the installation, the installer may replace the cable with a longer cord of the same electrical specifications.
6. Refer to Figure N on the next page for the direct vent fan control box cable wiring diagram.

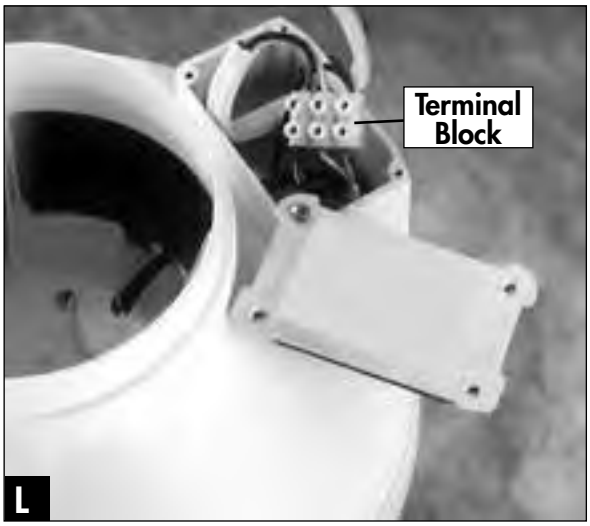

Factory Vent Fan Terminal Block 120VAC/50-60/1

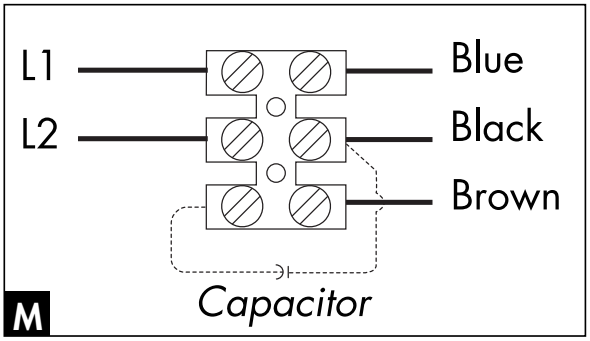

Factory Supplied Vent Fan Terminal Block Wiring Diagram

Electrical Connections for the Optional Direct Vent Fan ***(Supplied By The Factory)***

The wiring diagram in Figure N below illustrates the cable wire connections for the vent fan electrical control box wired for the optional direct vent fan supplied by the factory.

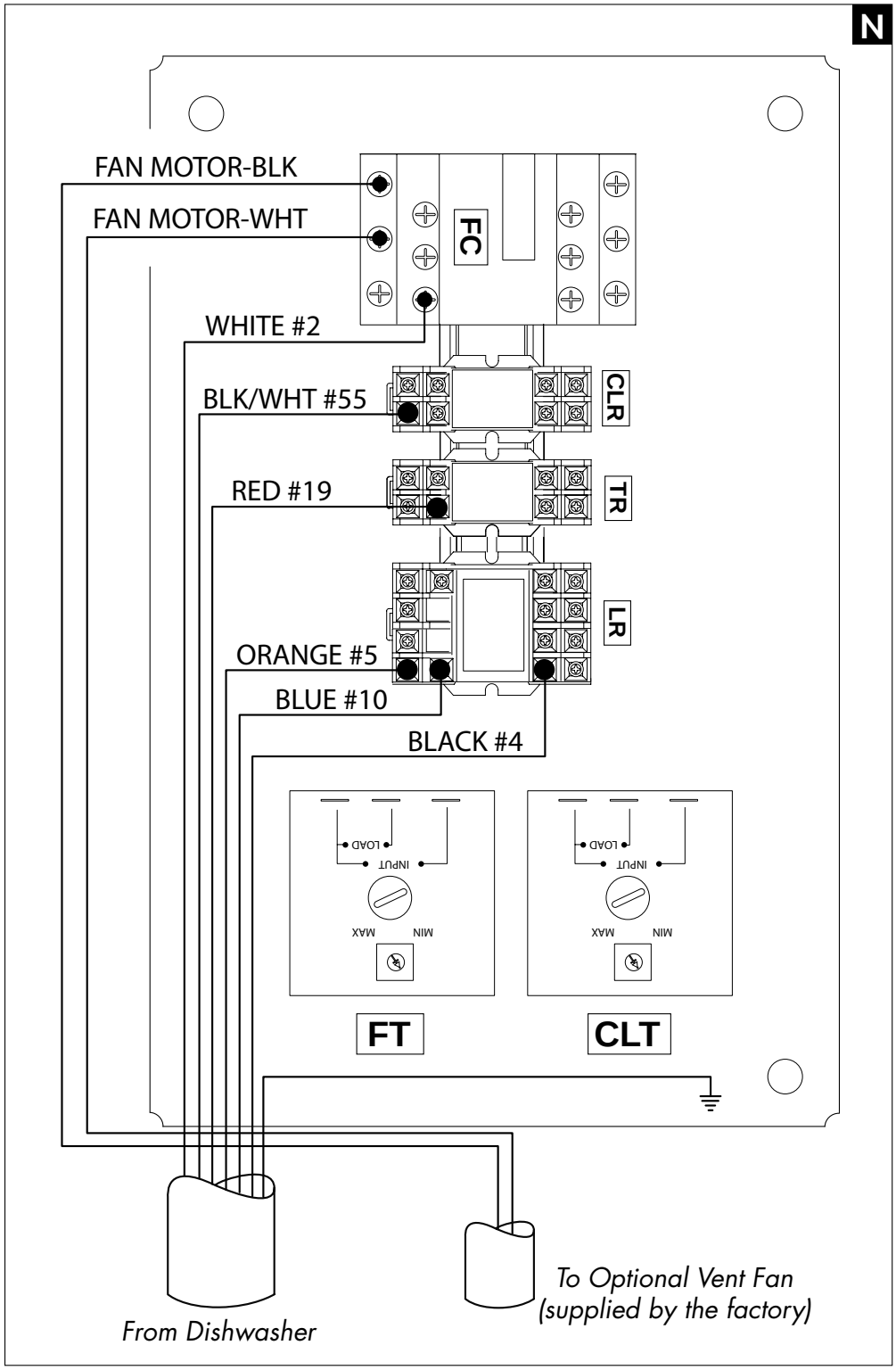

Installing a Direct Vent Fan ***(Supplied By Others)***

The direct vent option requires an exhaust vent fan capable of supplying 250CFM at 1/4" S.P. at the dishwasher. Refer to Figure A below for the recommended configuration of the vent duct at the dishwasher.

! VERY IMPORTANT !
The direct vent fan must not exhaust into a wall, ceiling, crawl space, or any other concealed space of a building nor a gas vent or any other common vent.
The direct vent fan must exhaust to the outside of the building.

! ATTENTION !
The vent installation must be performed by qualified personnel in accordance with all local codes and regulations.

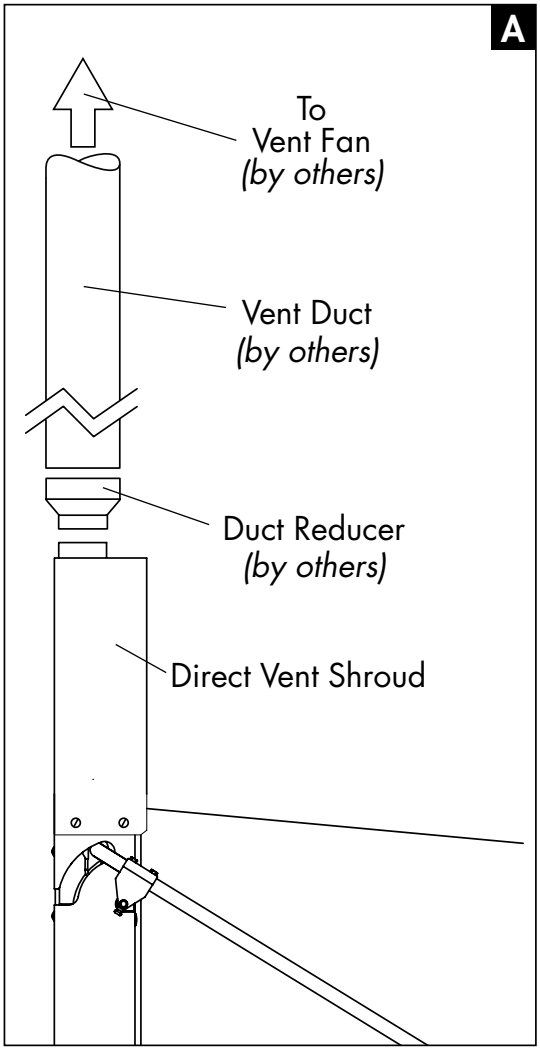

1. The exhaust vent fan supplied by others must supply 250 CFM at 1/4" S.P. suitable for installation as part of the direct vent option.
2. Duct work, duct reducer associated fasteners, and connectors must be supplied by others.
3. The installation of a 6" to 4" duct reducer is highly recommended as shown in Figure A at left.
4. The length of duct and the location of the vent fan must conform to local codes and regulations.

Electrical Connections for a Direct Vent Fan ***(Supplied By Others)***

! IMPORTANT !
Electrical installation must be performed by qualified personnel in accordance with all local codes and regulations or in the absence of local codes then in accordance with the National Electrical Code or the Canadian Electrical Code.
DO NOT CONNECT POWER UNTIL THE FAN IS COMPLETELY INSTALLED.

Direct Vent Control Box:

1. Electrical connections for a direct vent fan (supplied by others) are made in the Direct Vent Control box, *(See Figure B at right),* which was shipped with the dishwasher and stowed in the rear of the machine.
2. The control box can be mounted on the left-side of the machine *(See page 79, Figures I & J) or* wall-mounted using P/N 900958, Control Box Wall Mount Kit. The wall-mount kit is sold separately.

Cable Connections:

1. Refer to Figure B at right.
2. Remove the control box water-tight cover.
3. An interconnect control cable between the dishwasher and the control box is prewired at the factory.
   DO NOT CUT NOR DISCONNECT THIS CABLE WITHOUT PERMISSION FROM THE FACTORY.
4. One cable is required to bring power from an external power source into the control box.
   DO NOT USE THE DISHWASHER AS A POWER SOURCE FOR A DIRECT VENT FAN SUPPLIED BY OTHERS.
5. One cable is required to connect power from the control box to the direct vent fan.

(continued on next page)

Electrical Connections for a Direct Vent Fan ***(Supplied By Others)***
(continued)

WARNING:
Electrocution or serious injury may result when working on an energized circuit.

Disconnect power at the main breaker or service disconnect switch before working on the circuit.

Lock-out and tag the breaker to indicate that work is being performed on the circuit.

Direct Vent Control Box Wiring:

1. Refer to Figure C at right and note the contactor labeled FC. Contactor FC is located in the top of the direct vent control box and controls the direct vent fan operation.
2. The wires marked #2 and #53 in Figure C must not be moved nor should other wires be connected to these terminals.
3. The external power source for the direct vent fan (supplied by others) must be connected to the L1, L2, L3 terminals on Contactor FC. The external power source can be single or three phase.
   (See Diagram D on the next page).
4. Connect the direct vent fan (supplied by others) to T1, T2, T3 terminals on Contactor FC.
   (See Diagram D on the next page).
5. Diagram E on page 88 shows the internal wiring of the control box before any external cable connections are made.
6. Re-install the control box water-tight cover to complete the control box wiring.

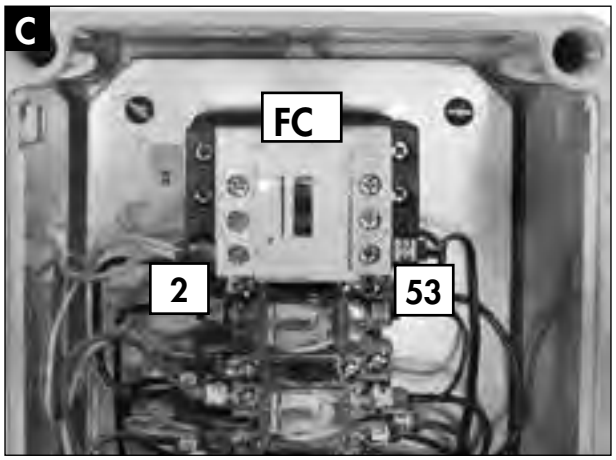

Interior view of the direct vent control box showing Contactor FC provided for vent fan power control.

! ATTENTION INSTALLER !

OVERLOAD PROTECTION DEVICES FOR A DIRECT VENT FAN SUPPLIED BY OTHERS ARE NOT INCLUDED IN THE DIRECT VENT CONTROL BOX SHIPPED WITH THE MACHINE.

CONTROL RELAYS, ISOLATION SWITCHES, AND OVERLOAD PROTECTION DEVICES MUST BE INSTALLED IN A SEPARATE ENCLOSURE AND NOT INSTALLED INSIDE THE DISHWASHER NOR THE DIRECT VENT FAN CONTROL BOX.

Direct Vent Control Cable Connection Diagram

D

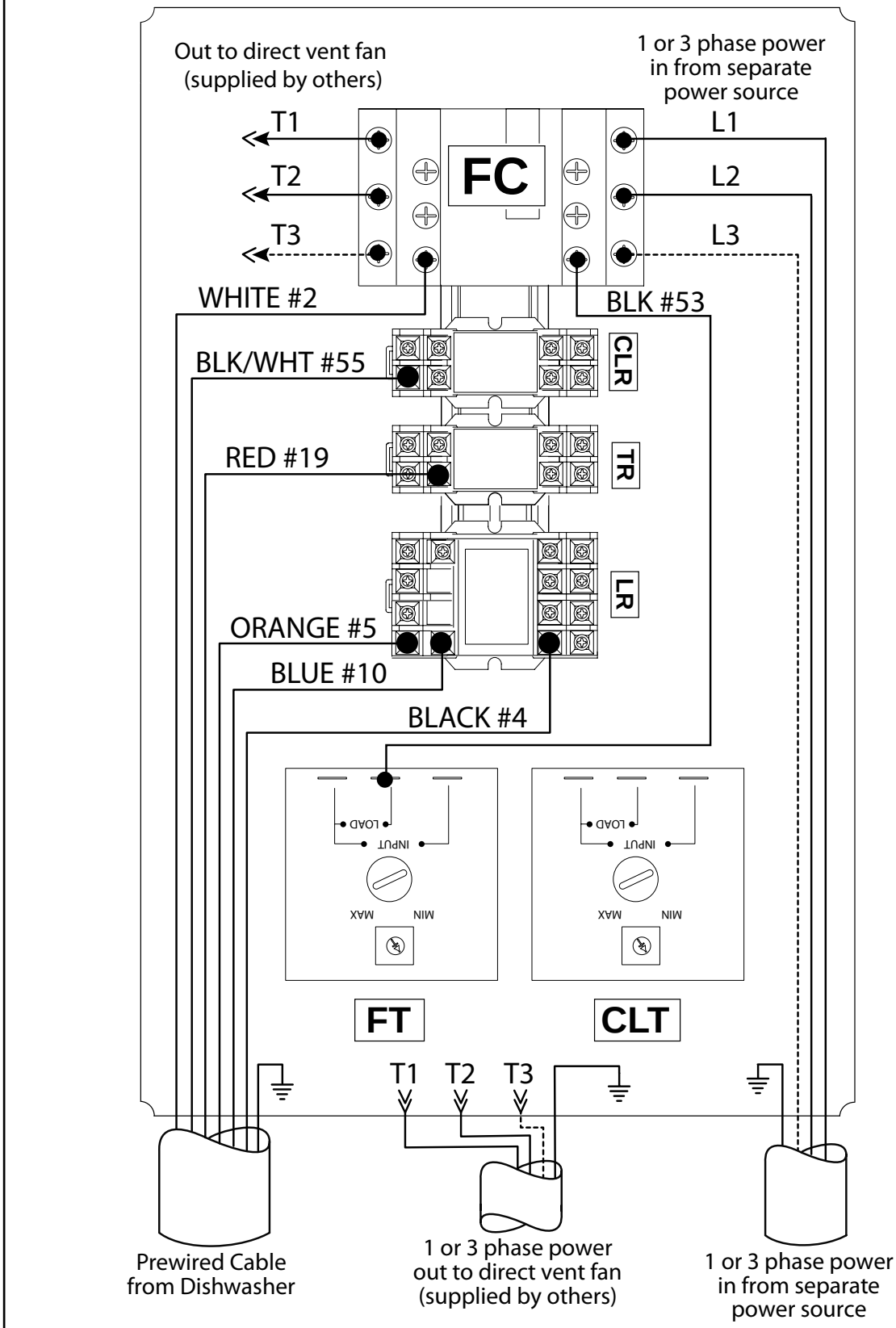

Direct Vent Control Box Wiring Diagram

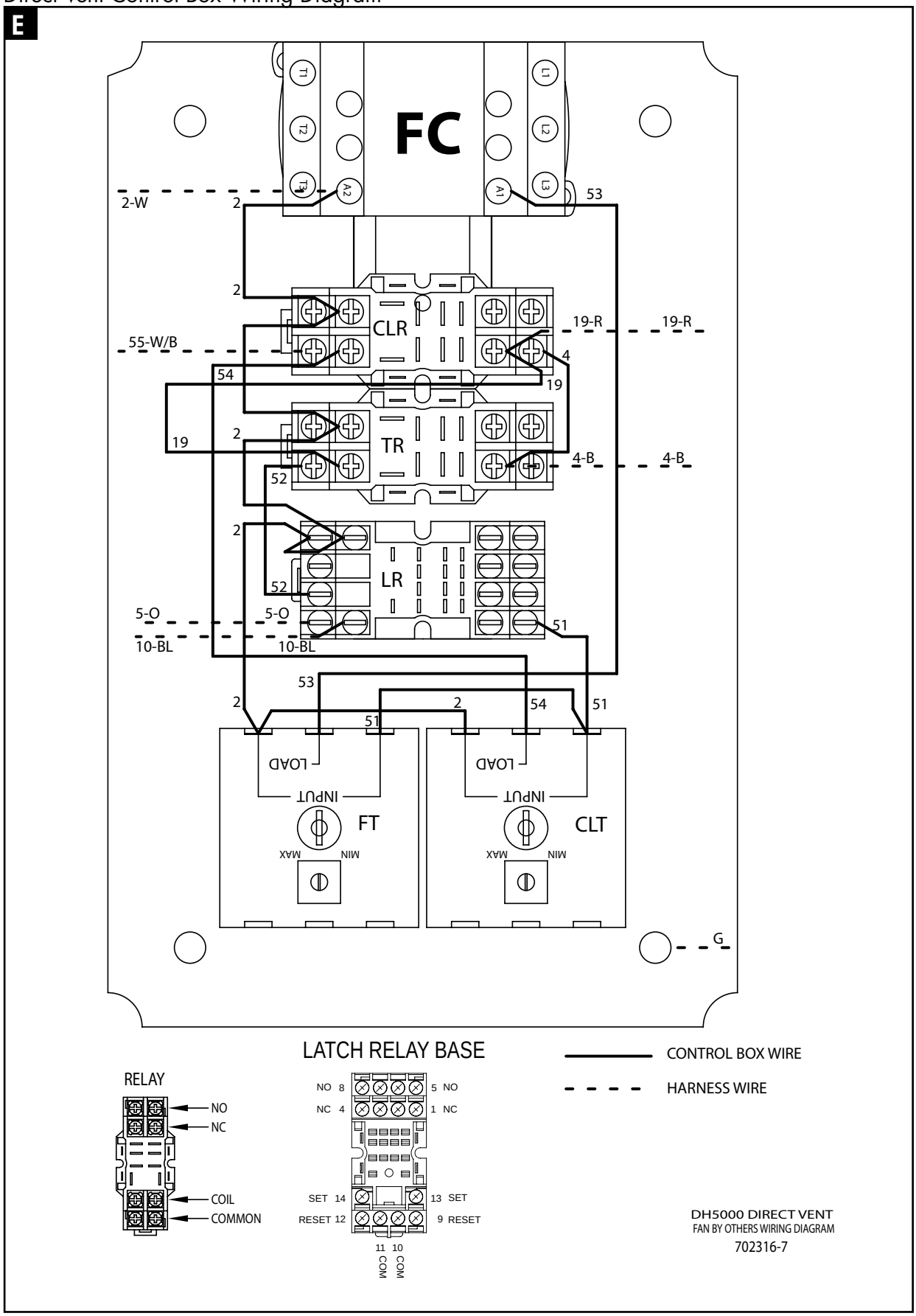

Tall Hood-type Series Condensate Removal Option Description

! ATTENTION !
The condensate removal shroud must be installed before the dishwasher is permanently placed and before the utilities are connected.

The condensate removal option is a stainless steel vent shroud (approx. weight 60 lbs./27 kg) and a control box mounted on the left side of the dishwasher.

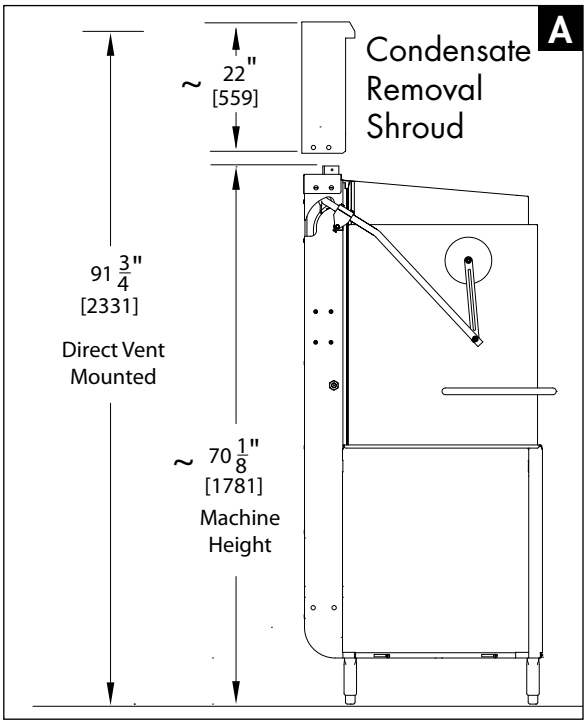

1. The condensate removal shroud is mounted on the top rear of the dishwasher using (4) 1/4-20 x 1/2" SST truss head screws. *(See Figure A).*

2. The shroud must be installed before the dishwasher is permanently placed and before connecting the utilities.

3. The dishwasher should be positioned in a manner which allows the dish tables and the machine to align for the proper loading and unloading of the dish racks. *(See Figure B).*

4. Only a 3/4" NPT cold water supply is required for the Condensate Removal Option *(See Figure B).*

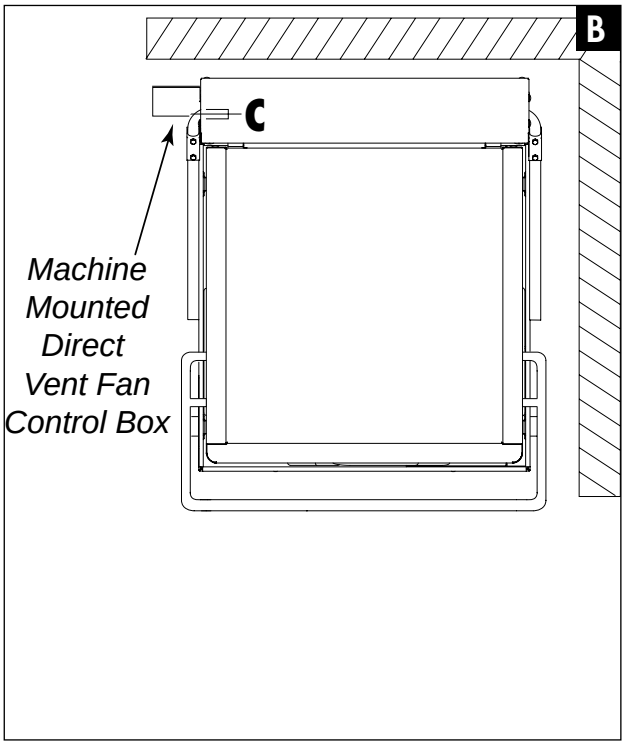

! VERY IMPORTANT !
The incoming cold water supply pressure must be a minimum of 45 PSI flowing pressure measured at the dishwasher inlet connection.

Installing the Condensate Removal Shroud

1. Remove the condensate removal shroud from its shipping container.
2. Refer to Figure C and note that the shroud has a front flange (Ca) and a rear extension (Cb) which interlock with the dishwasher vent opening.
3. Make sure (Ca) and (Cb) are properly connected to the dishwasher when the shroud is installed.
4. Refer to Figure C and note there are two electrical wires (Cc) and three hoses (Cd) attached to the shroud.
5. Carefully route (Cc) and (Cd) to the rear of the dishwasher when installing the shroud.

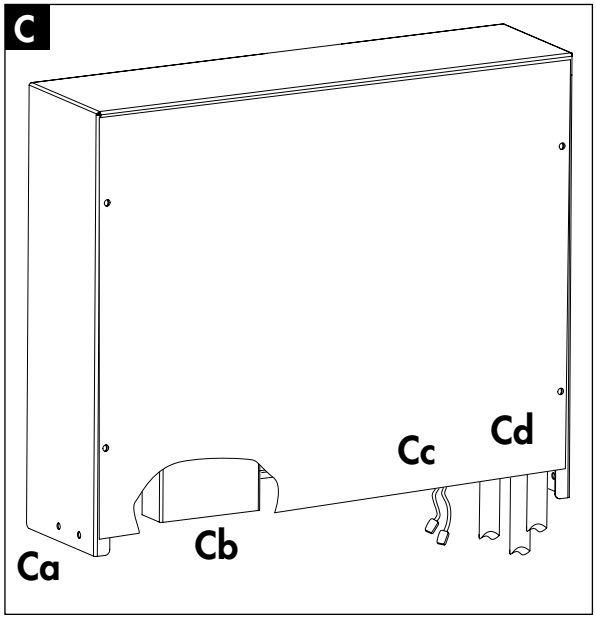

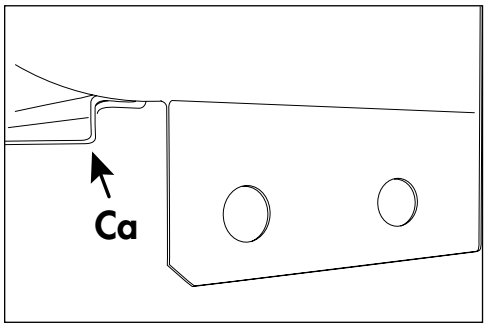

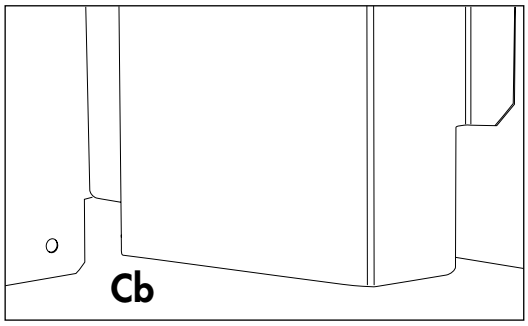

6. Two persons are needed to install the shroud on the dishwasher. (*See Figure D).*
7. Remove the (4) 1/4-20 x 1/2" truss head shroud mounting screws from the dishwasher hood.
8. Lift the shroud over the rear of the dishwasher and carefully lower it into position making sure that (Ca) and (Cb) connect the shroud to the dishwasher.
9. Reinstall the mounting screws.

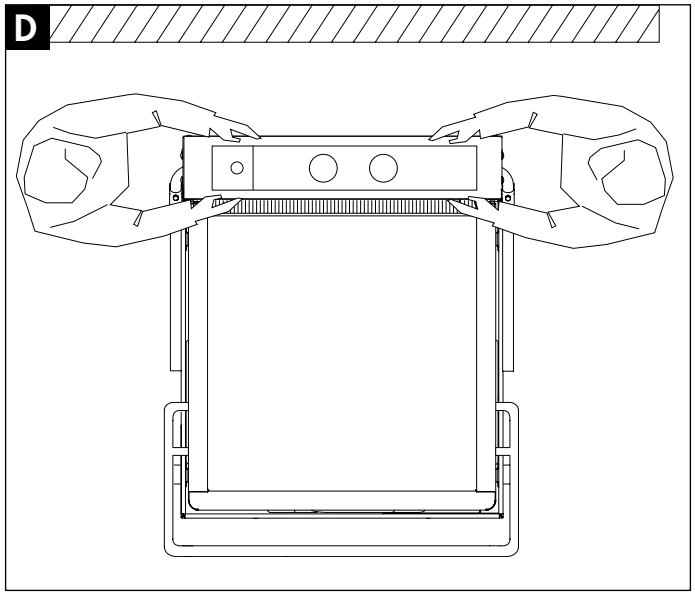

! ATTENTION !
The Condensate Removal Control box can be wall-mounted using a Wall Mount Kit, P/N 900958.
See the last page of this manual for further instructions.

Installing the Condensate Removal Electrical Control Box on the Left-hand side of the Tall Hood-type Series

The Condensate Removal Electrical Control Box is shipped prewired to the dishwasher and stowed in the back of the machine. Mounting holes and fasteners are provided to mount the control box to the left side of the machine. *(See Figure E).*

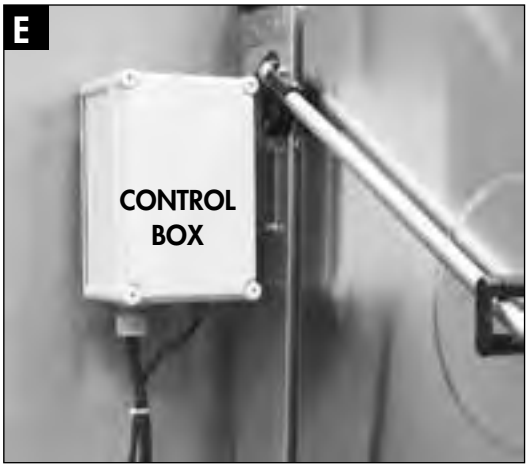

To Install the Electrical Control Box:

1. The electrical control box must be installed before the dishwasher is permanently placed and before the dishwasher tables are connected to the dishwasher.

2. Refer to Figure E at right. The photo shows the electrical control box mounted on the left side of the dishwasher approximately 46" [1.2 m] above the finished floor.

3. Refer to Figure F at right. The photo shows the storage location for the electrical control box during shipping.

4. Carefully lift the control box and mounting bracket assembly from the rear of the dishwasher and place it on the floor on the left-hand side of the machine when viewed from the front.

(continued on next page)

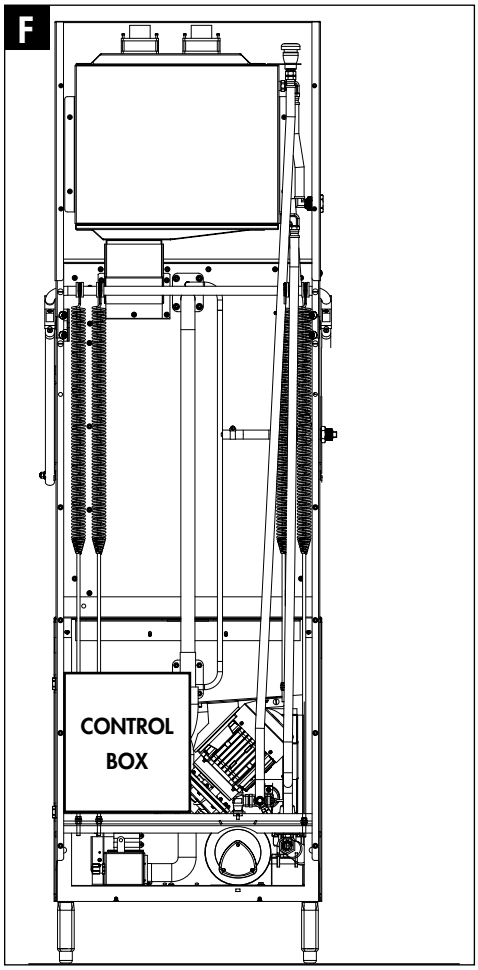

Installing the Condensate Removal Electrical Control Box

(continued from previous page)

5. Locate the (4) 1/4-20 x 1/2" Hex Head bolts on the upper left rear side of the dishwasher directly below the handle bracket *(Refer to Figure G).*

6. Remove these bolts and set aside.

7. Carefully lift the electrical control box and mounting bracket assembly in place, align the mounting holes and reinstall the mounting bolts removed in Step 6 above. *(See Figure H below).*

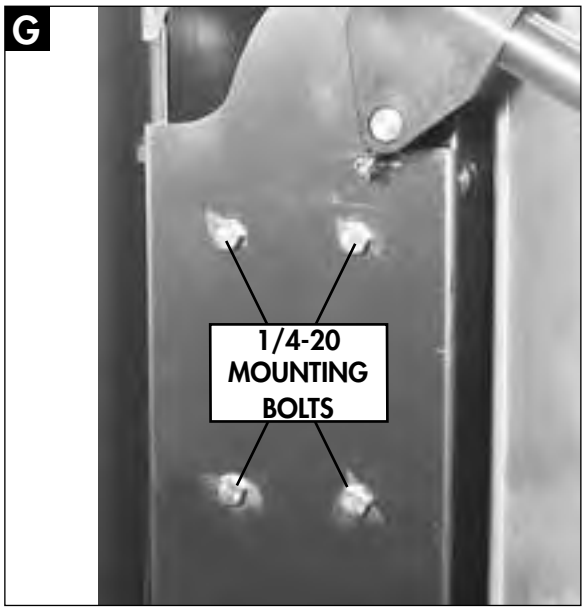

! ATTENTION !
The Condensate Removal Control Box connection diagram appears on page 99 of these instructions.
The control box connections were prewired at the factory.

Condensate Removal Shroud Electrical and Plumbing Connections

The following pages describe the electrical fan connection and the plumbing connections for the Condensate Removal Option. The chemical injection points for the Tall Hood-type Series are also included.

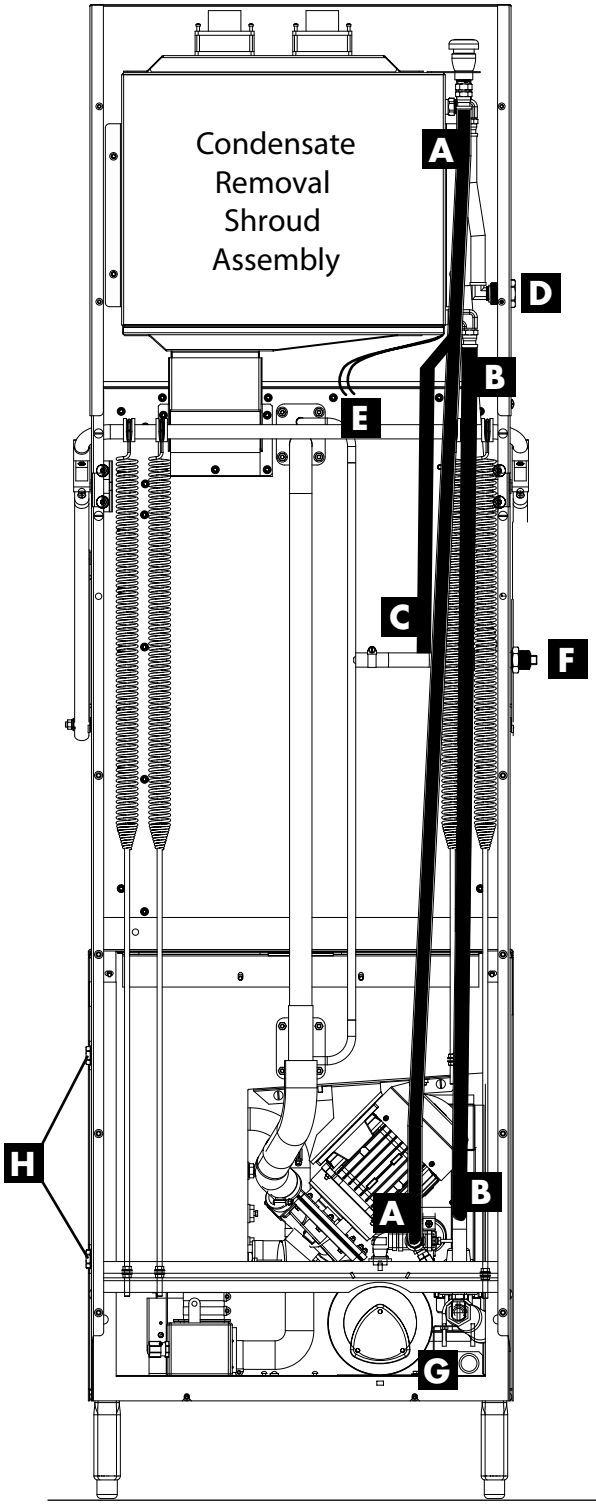

(A) Preconnected hose to the inlet of the vacuum breaker. The other end of this hose is connected to the booster outlet.

(B) Preconnected hose to the outlet of the condensate coil. The other end of this hose is connected to the inlet of the line strainer.

(C) Preconnected hose to the outlet of the vacuum breaker. The other end of this hose is connected to the inlet final rinse piping located behind the hood spring on the right-hand side of the hood as viewed from the rear.

(D) Cold water supply inlet.

(E) Condensate vent fan wires.

(F) Final rinse-aid injection point.

(G) Main power supply wire mounting bracket.

(H) Detergent injector and sensor connection points.

(continued on next page)

Condensate Removal Shroud Electrical and Plumbing Connections

(continued from previous page)

WARNING:
Electrocution or serious injury may result when working on an energized circuit.

Disconnect power at the main breaker or service disconnect switch before working on the circuit.

Lock-out and tag the breaker to indicate that work is being performed on the circuit.

1. The condensate removal shroud fans were prewired at the factory.
   When the shroud is installed on the top of the dishwasher, the shroud wires and their corresponding wires on the back of the dishwasher should be in close proximity to each other.

2. Locate the wires and connect black to black and white to white.
   (See Figures A at right.)

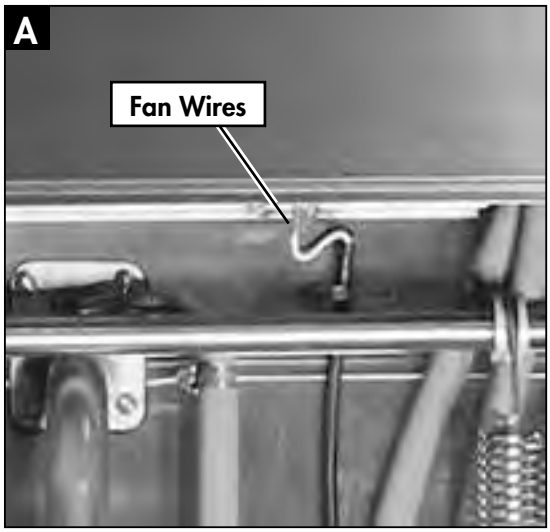

3. ! ATTENTION !
   Route the condensate removal shroud hoses behind the handle assembly as shown in Figure A above. The hoses shown in Figure B at right have been routed in front of the handle assembly, this is incorrect.

4. Referring to Figure B, note that there are three hoses preconnected to the condensate removal shroud. The hoses are different lengths to ensure that the hoses are connected to the correct locations.

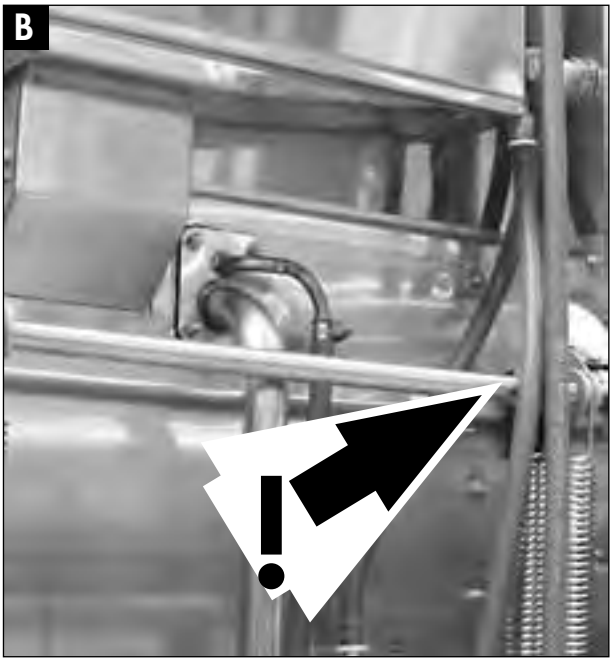

DO NOT route the condensate removal shroud hoses in front of the handle assembly as shown in this photo. Route the hoses behind the handle assembly against the rear of the machine.

Condensate Removal Shroud Electrical and Plumbing Connections

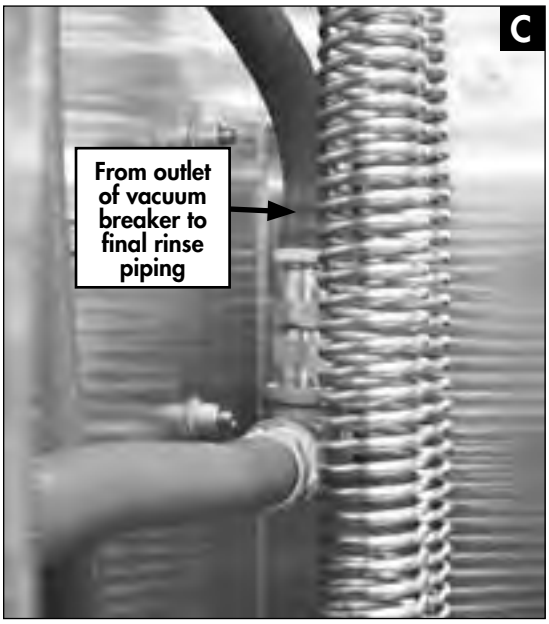

5. Refer to Figure C at left and note the connection point for the shortest length of preconnected condensate removal hose. The connection point is located directly behind the right-hand hood spring at the rear of the dishwasher.

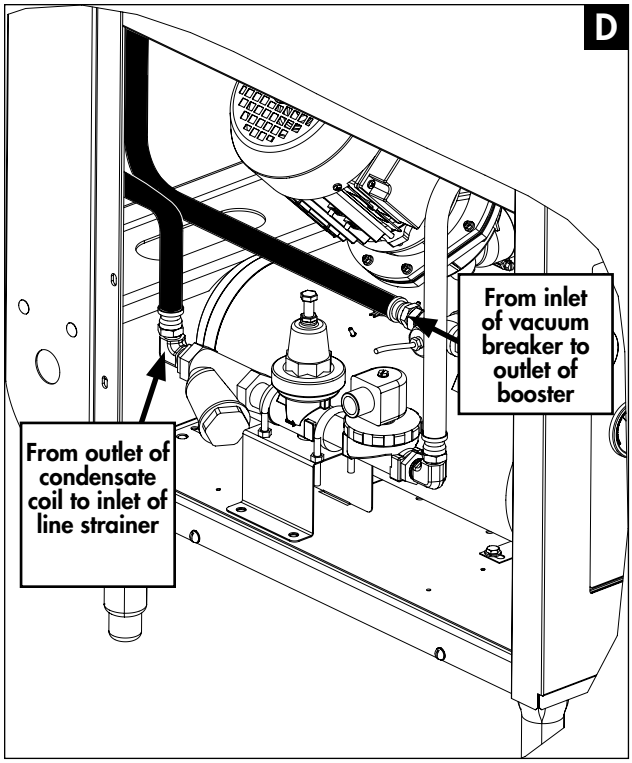

6. Refer to Figure D at left and note there are two hoses and two connection points shown. The hoses are different lengths and it will not be possible to make both connections if the hoses are reversed.

(continued on next page)

Utility Connections for the Tall Hood-type Series with Condensate Removal Option

Plumbing Connections

! VERY IMPORTANT !
The incoming cold water supply pressure must be a minimum of 45 PSI flowing pressure measured at the cold water supply connection.

1. The dishwasher equipped with a Condensate Removal Option requires an incoming cold water supply only *(See Figure E below).*

   COLD WATER — 3/4" NPT, 55-75°F/13-24°C Maximum temperature, with a minimum incoming flowing pressure of 45 PSI measured at the dishwasher supply connection before adjusting operating pressure to 20/25 PSI flowing pressure.

2. A water hardness of 3 grains/gal (US) [51.3 mg/L] or less is recommended. The cold water supply connection is located on the left side of the dishwasher approximately 64" above the finished floor (see the illustration below).

3. A manual shut-off valve, 3/4" or larger, should be installed in the cold water supply line as close to the dishwasher as possible for servicing.

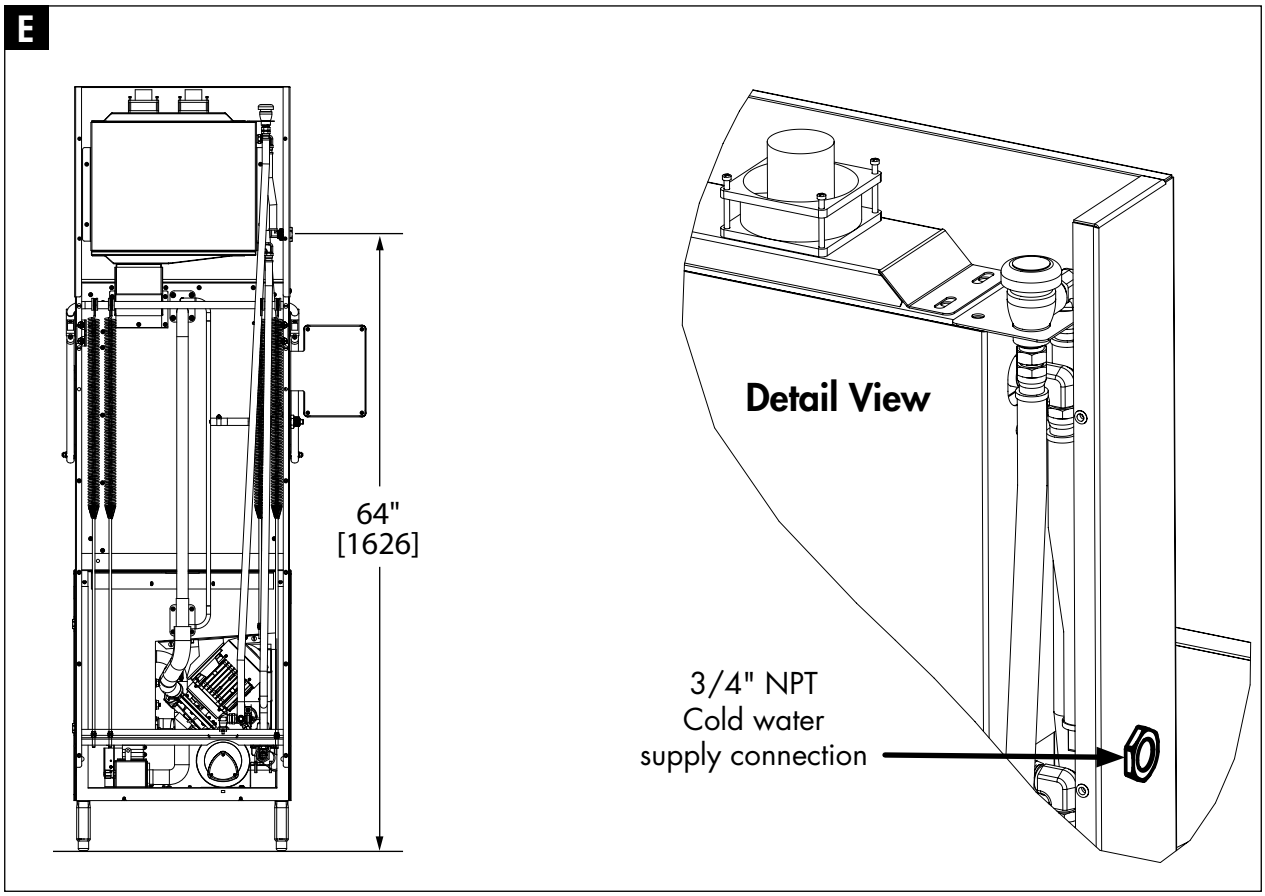

Utility Connections for the Tall Hood-type Series with Condensate Removal Option

Electrical Connections

WARNING:
Electrocution or serious injury may result when working on an energized circuit.

Disconnect power at the main breaker or service disconnect switch before working on the circuit.

Lock-out and tag the breaker to indicate that work is being performed on the circuit.

! ATTENTION !
A qualified electrician must connect the main incoming power to the dishwasher in accordance with all local codes and regulations or in the absence of local codes in accordance with the National Electrical Code. Improper installation will not be covered by the Limited Warranty.

Connecting Incoming Power Supply

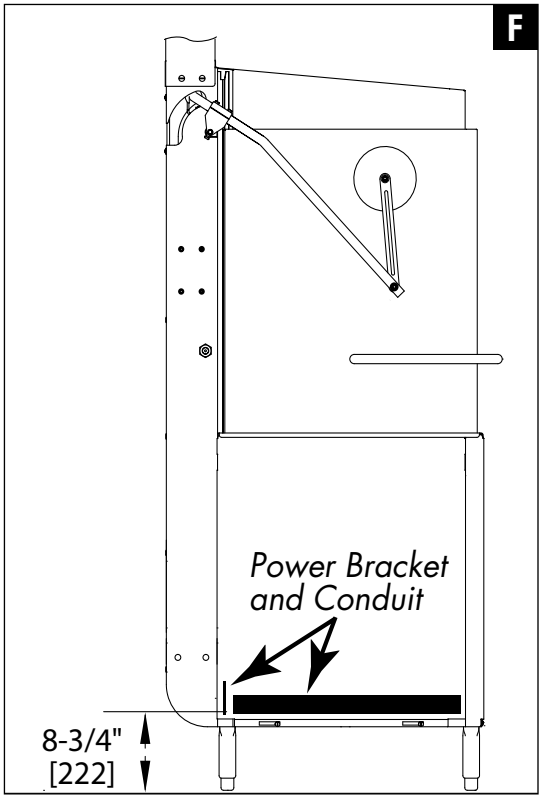

Incoming Power Routing.

1. Make sure the incoming power is disconnected at the main disconnect switch or circuit breaker.
2. The dishwasher is available for either single or three phase operation. Standard voltages are 208-240V/60/1 & 3, and 460-480V/60/3.
3. A **Machine Electrical Connection Data Plate** is located directly below the input terminal block. Make sure the incoming power supply matches the machine's electrical requirement before connecting incoming power.
4. Remove the front and left side dishwasher panels.
5. The incoming power supply is routed from the rear of the machine to the input terminal block located at the front of the machine.

Utility Connections for the Tall Hood-type Series with Condensate Removal Option

Chemical Connection Provisions

! ATTENTION !
Consult a qualified chemical supplier for chemical supplies and chemical dispensing equipment.

1. Provisions for chemical suppliers to connect their chemical dispensing systems are provided on the dishwasher and include:

2. A 1/2" NPT fitting (A) rinse-aid injection point. The fitting is located on the left side of the dishwasher support hood (see illustration below).

3. Two 7/8" holes (B) are provided on the lower right side of the wash tank for detergent injection and the detergent probe.

4. Detergent and rinse-aid control signals are available inside the control cabinet.

5. The signals are 120VAC, Max. 1 Amp load. Connection points are located on a labeled terminal block (see below).

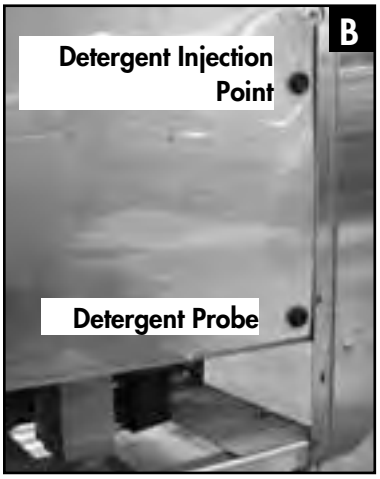

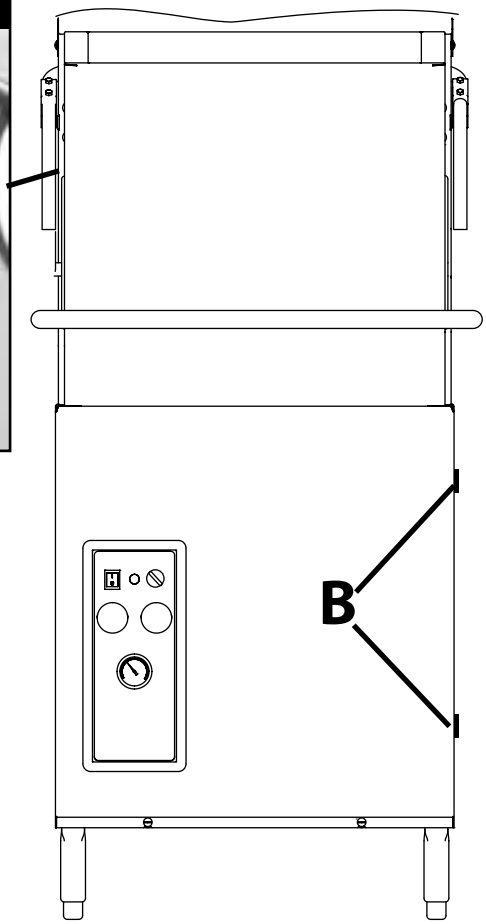

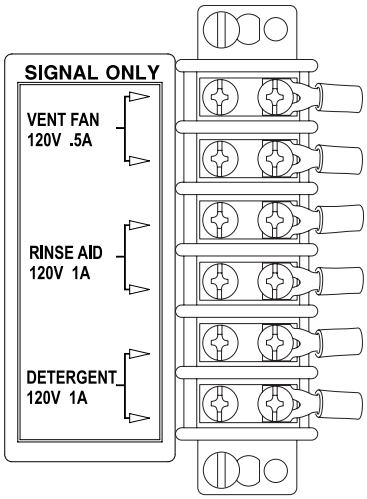

120VAC, 1A Dispenser Signal Terminal Block

Condensate Removal Control Box Connection Diagram

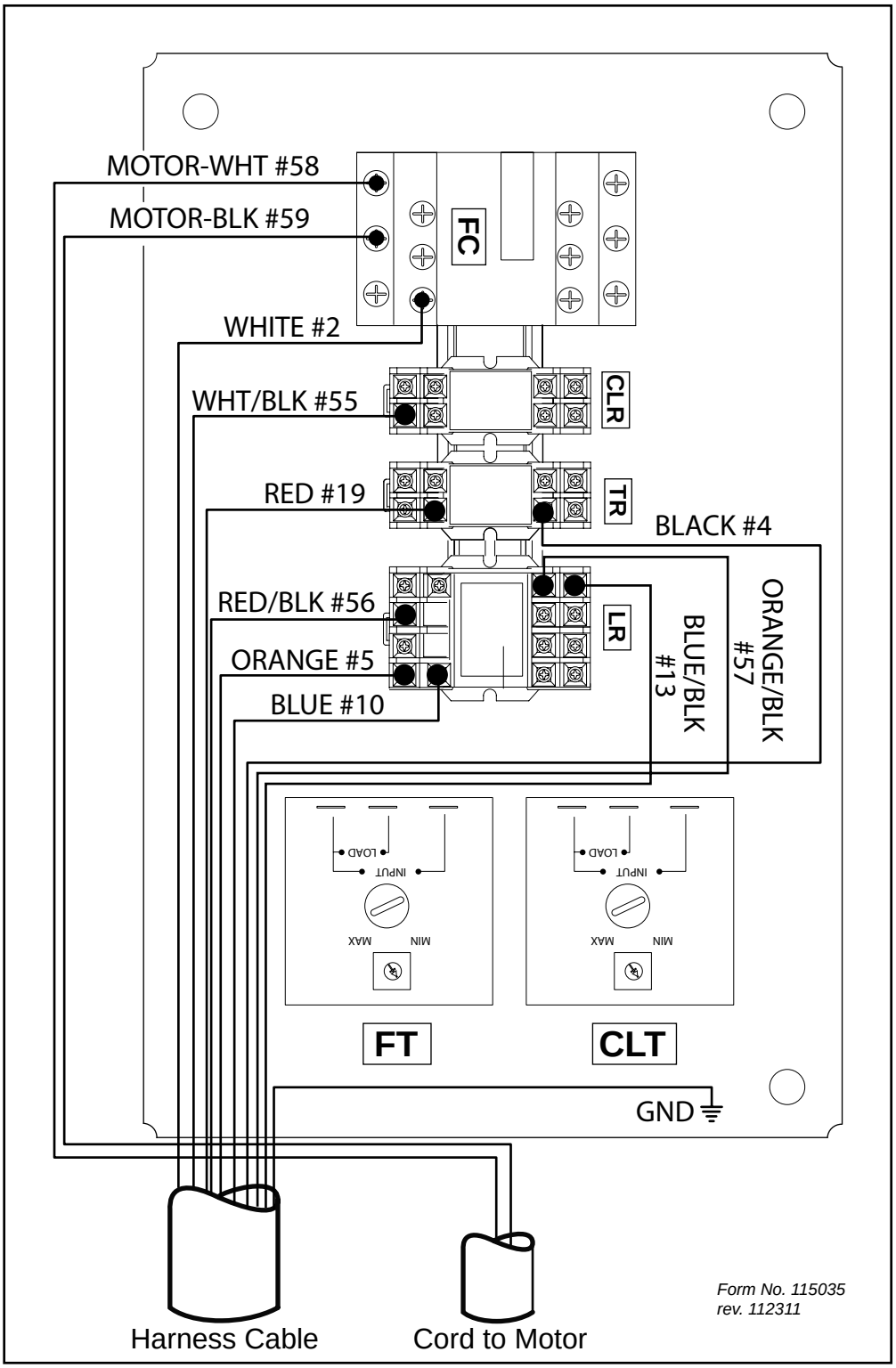

This is the end of the Condensate Removal Option Installation Instructions.

This Page Intentionally Left Blank

Hot Water Coil Installation and Grundfoss Pump Purge Instructions

Illustrations.....Page

Gas Booster Heater Overview 104
Grundfoss Pump Air Purge Instructions 106

Time Cycle Charts and Electrical Schematics

Illustrations **Page**

Time Cycle Charts 107
Standard Model Electrical Schematic..... 109
Vent Options Electrical Schematic..... 110
Vent Options with Door Latch Electrical Schematic..... 111
Hot Water Coil Electrical Schematic 112

Kit P/N 900958 Control Box Wall Mount Kit

Installation Instructions 113

Vanguard Gas Booster Installation

NOTE:
The installation of your GAS BOOSTER must be performed by qualified service personnel. Problems due to improper installation are not covered by the Warranty.

NOTE:
The installation of the GAS BOOSTER must comply with all local electrical, plumbing, health and safety codes or in the absence of local codes, installed in accordance with the applicable requirements of the Standard for Ventilation Control and Fire Protection of Commercial Cooking Operations, NFPA 96.

NOTE:
Installation of the GAS BOOSTER must be in accordance with local codes,or in the absence of local codes, with the latest edition of the National Fuel Gas Code, ANSI Z223.1, the National Electrical Code, ANSI/NFPA 70. Canadian installations should conform with CSAB149.1, Natural Gas and Propane Installation Code, and CSA-C22.1 Electrical Code, and/or local installation codes.
{Les installations canadiennes doivent se conformer aux CODES D'INSTALLATION CSA-B149.1, Natural Gas and Propane Installation Code, et CSA-C22.1 Electrical Code, et/ou aux codes locaux d'installation.}

UTILITIES *(Vanguard Installation Only)*

①	ELECTRICAL	Ⓑ BSTR CONNECTION 120V 1PH 6.2 AMPS
②	HOT WATER	3/4" NPT HOT WATER 140°F FOR 40°F RISE INLET WATER TO BOOSTER - MIN. 40PSI, MAX 80PSI
③	DRAIN	2" O. D. MACHINE DRAIN CONNECTION 15 GPM MAX FLOW
④	GAS CONNECTION	NATURAL GAS 199,100 BtuH 3/4" NPT NATURAL GAS PRESSURE 10.5" MAX AT INLET
⑤	EXHAUST CONNECTION	4" DIAMETER VENT DUCT WITH UNATTACHED FLEXIBLE DUCTING. VENT PER LOCAL CODE

NOTE:
The illustration below shows a typical straight-through dishwasher installation with gas booster heater. Your installation may be different. Refer to the installation instructions shipped with your gas booster for details.

Vanguard Technology Inc.
1(800) 624-4809

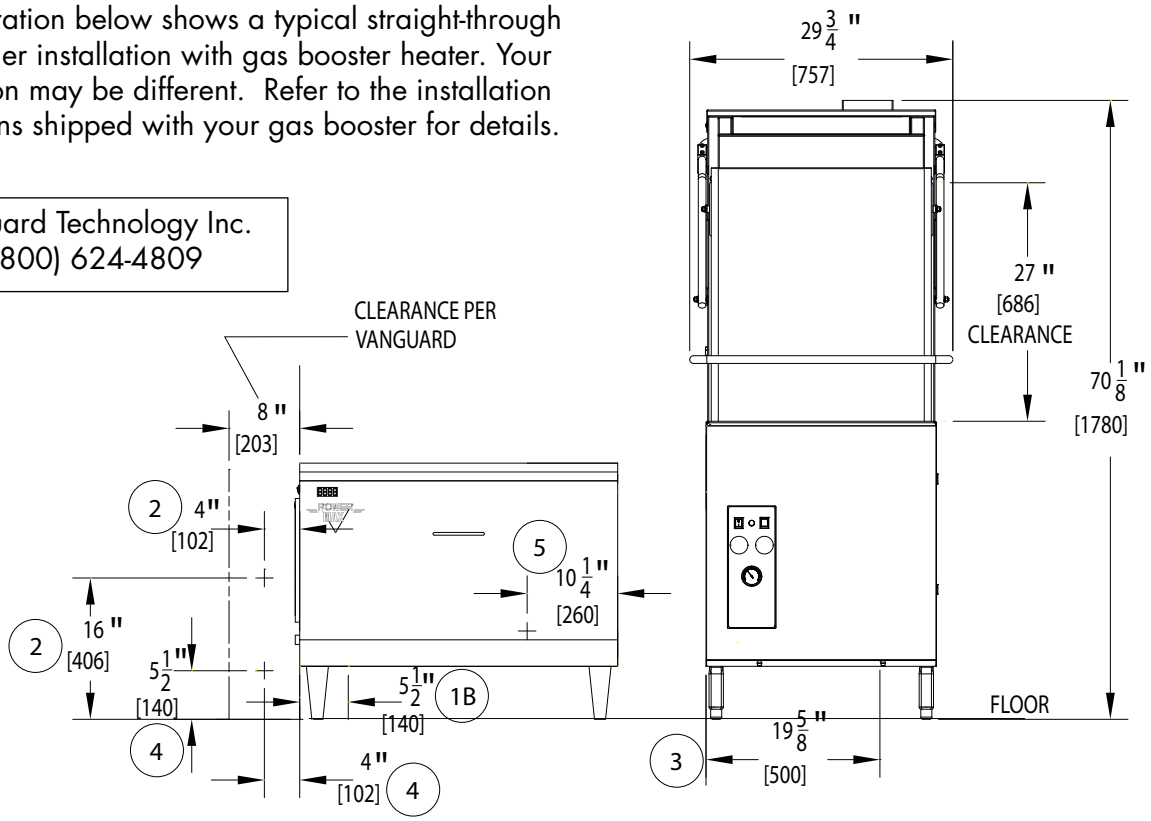

Typical Straight-through Dishwasher Installation

Hatco Gas Booster Installation

NOTE:
The installation of your GAS BOOSTER must be performed by qualified service personnel. Problems due to improper installation are not covered by the Warranty.

NOTE:
The installation of the GAS BOOSTER must comply with all local electrical, plumbing, health and safety codes or in the absence of local codes, installed in accordance with the applicable requirements of the Standard for Ventilation Control and Fire Protection of Commercial Cooking Operations, NFPA 96.

NOTE:
Installation of the GAS BOOSTER must be in accordance with local codes,or in the absence of local codes, with thelatest edition of the National Fuel Gas Code, ANSI Z223.1, the National Electrical Code, ANSI/NFPA 70. Canadian installations should conform with CSAB149.1, Natural Gas and Propane Installation Code, and CSA-C22.1 Electrical Code, and/or local installation codes. *{Les installations canadiennes doivent se conformer aux CODES D'INSTALLATION CSA-B149.1, Natural Gas and Propane Installation Code, et CSA-C22.1 Electrical Code, et/ou aux codes locaux d'installation.}*

NOTE:
The illustration below shows the typical Hatco PMG-200 gas booster heater specifications. Refer to the installation instructions shipped with your gas booster for details.

Hatco Corporation
1(800) 558-0607

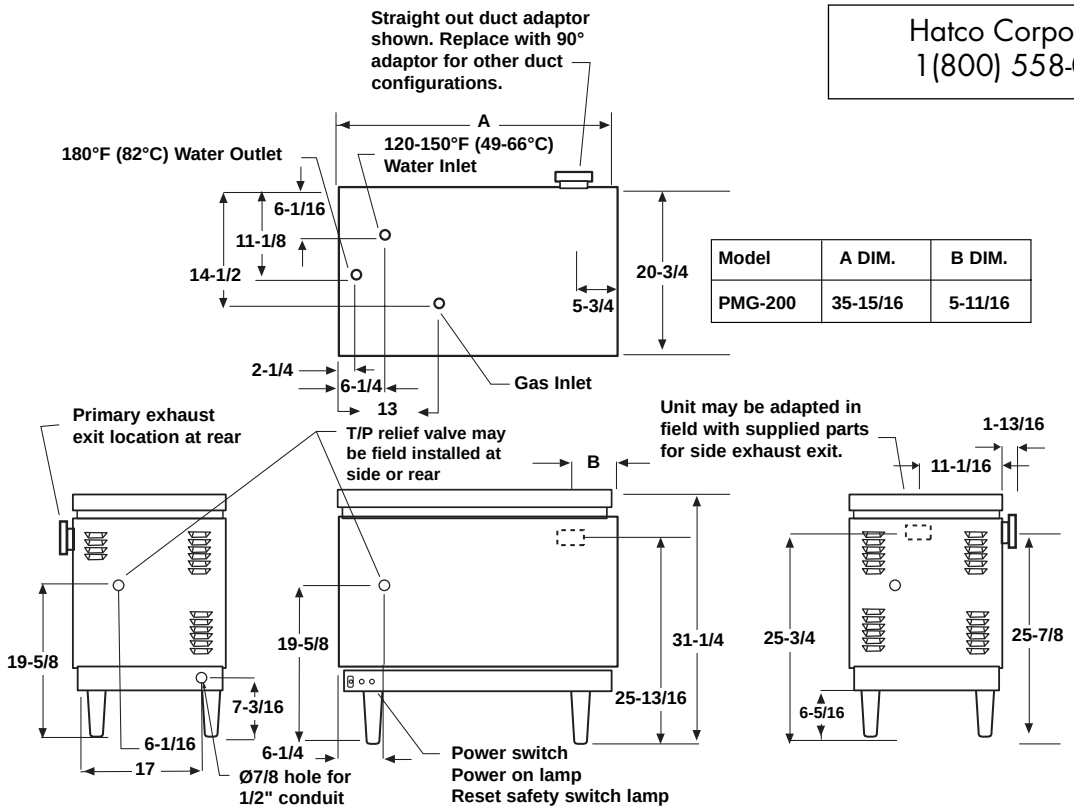

Model	A DIM.	B DIM.
PMG-200	35-15/16	5-11/16

NOTE: Dimensions listed are in inches.

NOTE: Overall Dimensions PMG 200: 36" W x 20-3/4" D x 31" H (914 x 527 x 787 x mm)

! CAUTION !

PERMANENT DAMAGE TO THE GRUNDFOSS HOT WATER CIRCULATING PUMP MAY OCCUR IF THE AIR IS NOT PURGED FROM THE HOT WATER COIL HEATING SYSTEM PRIOR TO OPERATING THE DISHWASHER AND GAS BOOSTER.

FOLLOW THE INSTRUCTIONS BELOW TO PURGE THE AIR FROM THE SYSTEM.

1. Make sure the dishwasher main power switch is OFF.
2. Make sure the main water supply valve located at the booster heater is OFF.
3. Open bleed valve (A) on the inlet side of the dishwasher hot water heater coil.
4. Remove the silver plug (B) located in the center of the recirculating pump.
5. Turn the main water supply valve ON. Water will begin to fill the booster heater and the dishwasher heater coil.
6. Place a container under the recirculating pump plug (B) and the bleed valve tubing (C) to catch the water.
7. Water and air will begin to flow out of the recirculating pump (B) bleed valve tubing (C).
8. Turn the gas booster heater power switch ON.
9. Turn the dishwasher power switch ON. The dishwasher wash tank will begin to fill with water.
10. Continue to observe the bleed valve tubing (C) and the recirculating pump (B) and make sure that there is a steady stream of water flowing from (C) and (B).
11. Replace the silver plug (B) in the center of the recirculating pump when the water flows steadily.
12. Close the bleed valve (A).
13. Turn the dishwasher power switch OFF. Turn the booster power switch OFF.
14. Purging is complete.

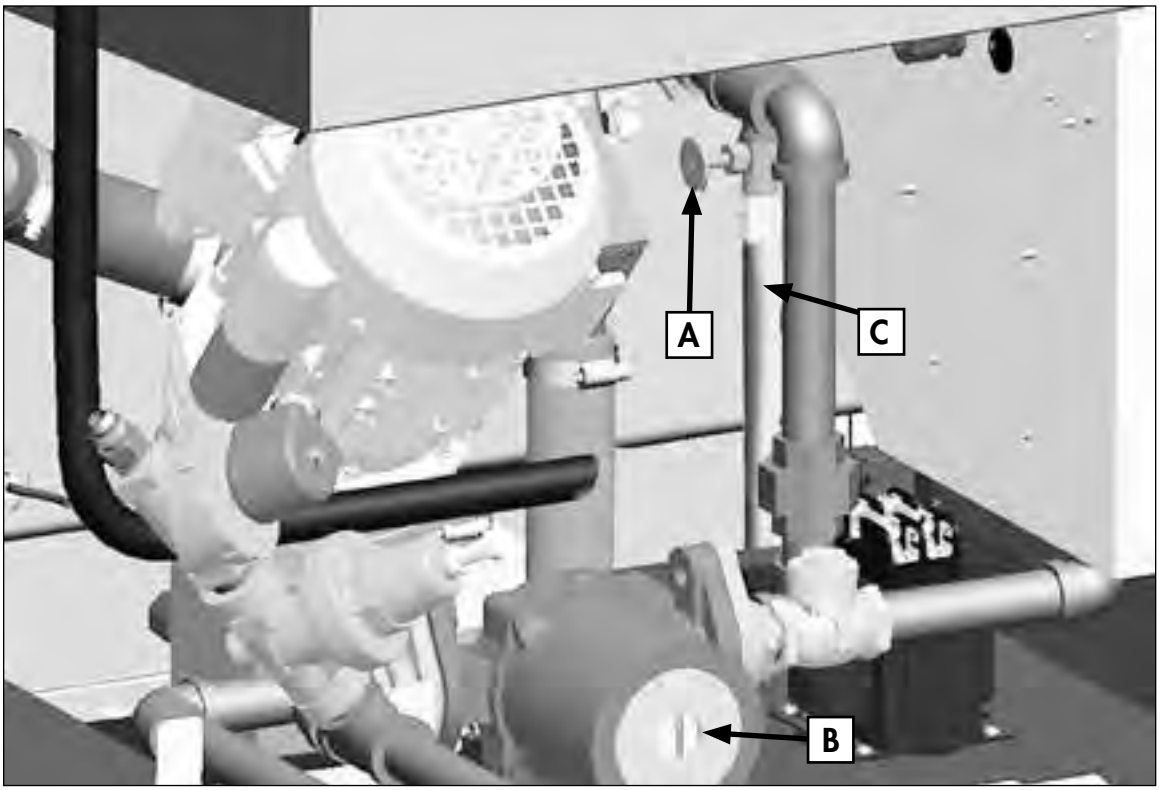

TIME CYCLE - Tall Hood-type Series - MODE "B"

DRAWING REPRESENTS ONLY THE STRUCTURE OF TIME CYCLES.
FOR MODES OF OPERATION SEE DWG# 114470 SHEETS 10-16

NORMAL CYCLE
60 SECONDS TOTAL CYCLE

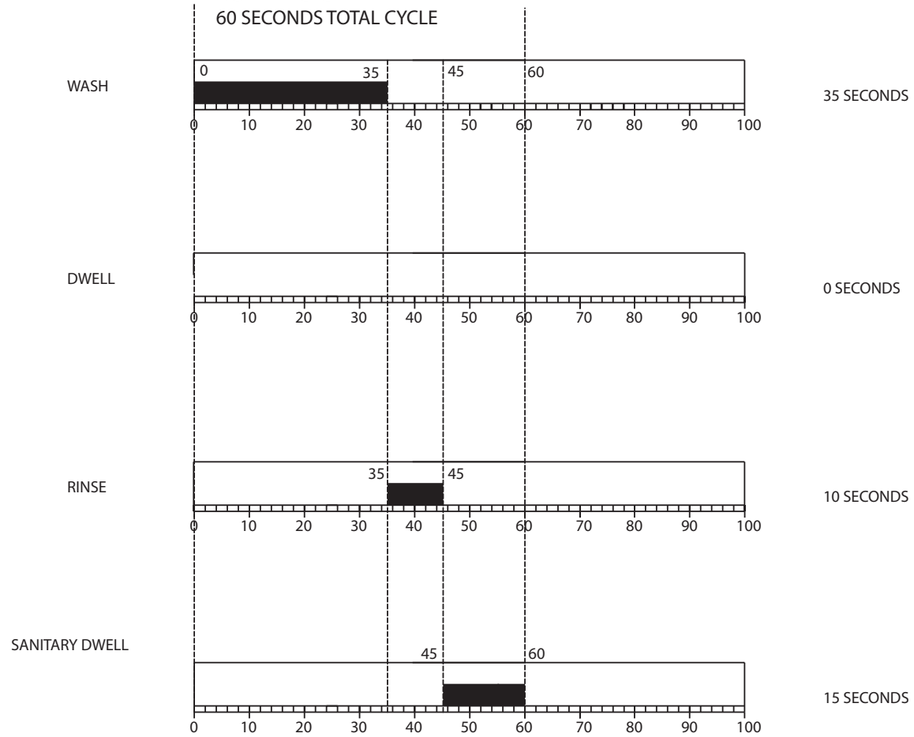

CYCLE# 1:
60 SECONDS CYCLE CONSISTING OF:
35 SECOND WASH,
0 SECOND DWELL,
10 SECOND RINSE,
15 SECOND SANITARY DWELL.

EXTENDED CYCLE
90 SECONDS TOTAL CYCLE

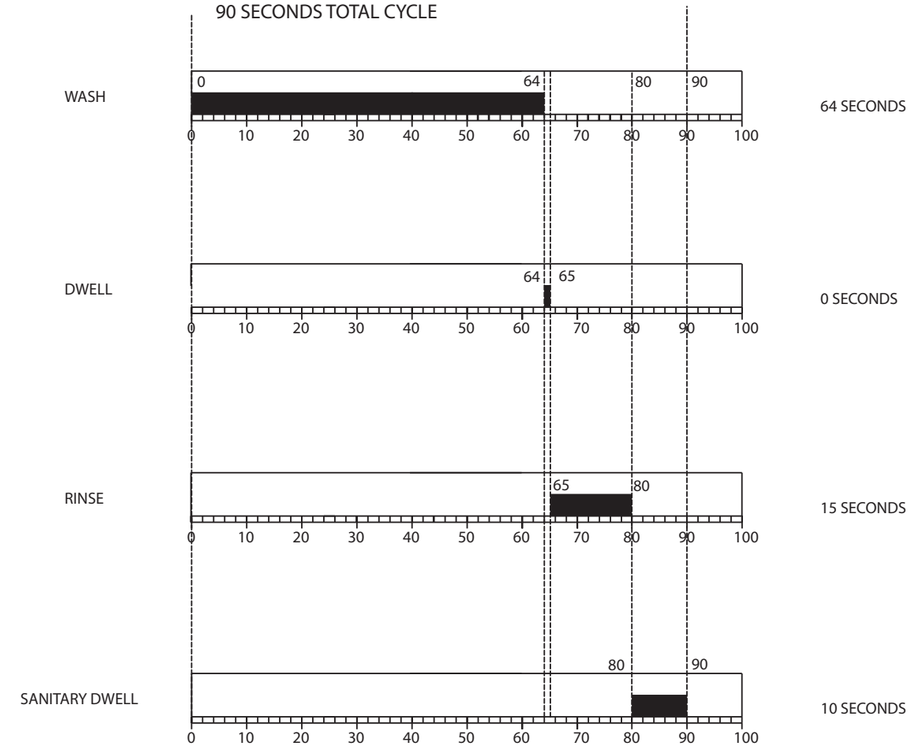

CYCLE# 2:
90 SECONDS CYCLE CONSISTING OF:
64 SECONDS WASH,
1 SECONDS DWELL,
15 SECONDS RINSE,
10 SECONDS SANITARY DWELL.

CUSTOMER TO SUPPLY RATED VOLTAGE/PHASE/Hz,
AS SPECIFIED PER ORDER,TO DISCONNECT SWITCH.
ALL POWER SUPPLIED TO EACH CONNECTION POINT
MUST COMPLY WITH ALL LOCAL ELECTRIC CODES.

DR.BY	J.MCALLISTER	SCALE	
DATE	2MAR12	SHEET	1 OF 1

REV.	DESCRIPTION	DATE	BY
A	CHANGED RINSE AND DWELL CYCLE TIMES	13AUG12	JAM
B	CHANGED RINSE AND DWELL CYCLE TIMES	19SEP12	JAM

REV.	DESCRIPTION	DATE	BY

Champion
The Dishwashing Machine Specialists

TIME CYCLES
Tall Hood-type
B 114470-9 REV. B

Tall Hood-type Series - MODE C - TIME CYCLES 3 AND 4

DRAWING REPRESENTS ONLY THE STRUCTURE OF TIME CYCLES 3 AND 4.
FOR CYCLES 1 AND 2 SEE DWG# 114470 SHEET 9

JUMPER SETTINGS:
JB1 = OPEN
JB2 = CLOSED
JB3 = OPEN

NOTES:
TRIGGERING EVENT:

CYCLE SWITCH IN POSITION 1, 2, 3 OR 4

"CYCLE SWITCH" STATE IS IGNORED DURING CYCLE, IT IS READ AT BEGINNING AT THE CYCLE AND PROPER CYCLE TIME STRUCTURE APPLIED.

CYCLE 3

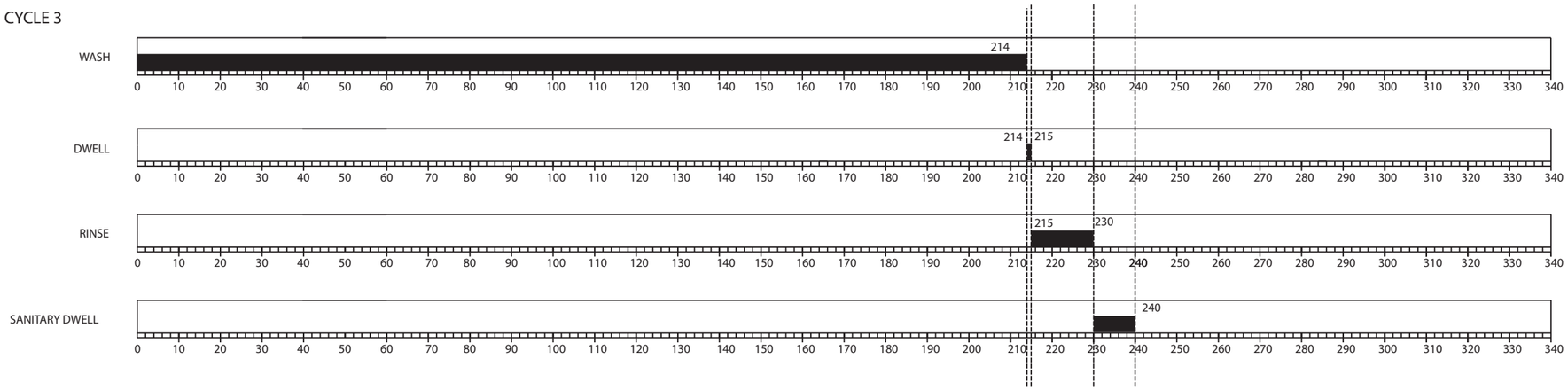

INPUTS
SOLID LINE INDICATES SWITCH CLOSURE

OUTPUT
SOLID LINE INDICATES 120VAC COMING OUT OF THE OUTPUT TERMINAL

INITIAL STATE:
POWER ON
DOORS OPEN
TANK FULL

CYCLE 4

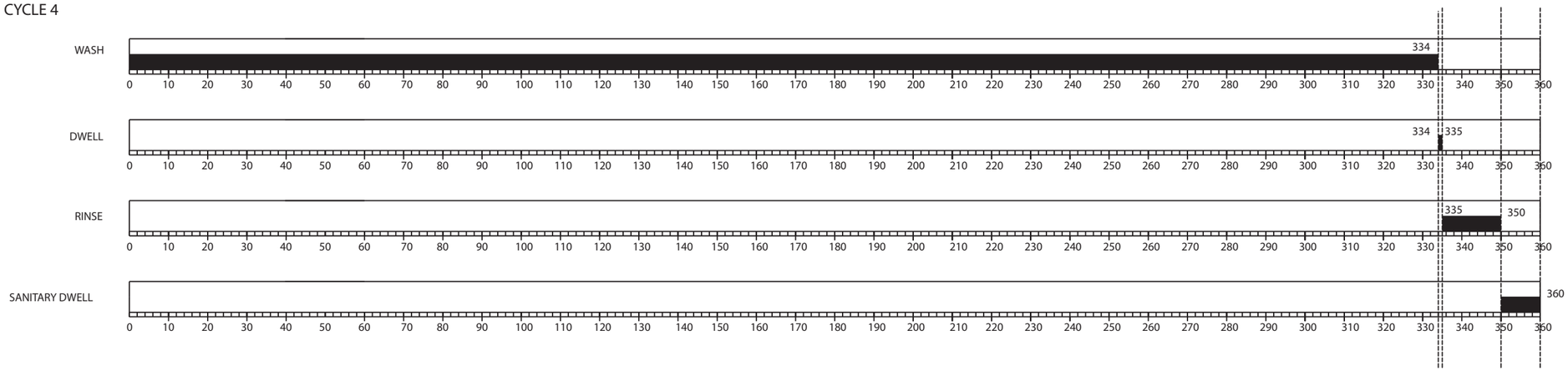

CYCLE 3 — 4 MINUTE CYCLE (240 SECONDS TOTAL)
CONSISTING OF: 214 SECOND WASH,
1 SECOND DWELL,
15 SECOND RINSE,
AND 10 SECOND DWELL.

CYCLE 4 — 6 MINUTE CYCLE (360 SECONDS TOTAL)
CONSISTING OF: 334 SECOND WASH,
1 SECOND DWELL,
15 SECOND RINSE,
AND 10 SECOND DWELL.

WASH TIMES:
1 MINUTE = ∞
90 SECONDS = 0 Ω
4 MINUTE = 4.7K Ω
6 MINUTE = 15K Ω

CUSTOMER TO SUPPLY RATED VOLTAGE/PHASE/Hz, AS SPECIFIED PER ORDER,TO DISCONNECT SWITCH. ALL POWER SUPPLIED TO EACH CONNECTION POINT MUST COMPLY WITH ALL LOCAL ELECTRIC CODES.

DR.BY	J.MCALLISTER	SCALE	
DATE	7MAR12	SHEET 1 OF 1	

REV.	DESCRIPTION	DATE	BY
A	CHANGED RINSE AND DWELL CYCLE TIMES	19SEP12	JAM

REV.	DESCRIPTION	DATE	BY

Champion
The Dishwashing Machine Specialists

TIME CYCLES
Tall Hood-type
B 114470-17 REV. A

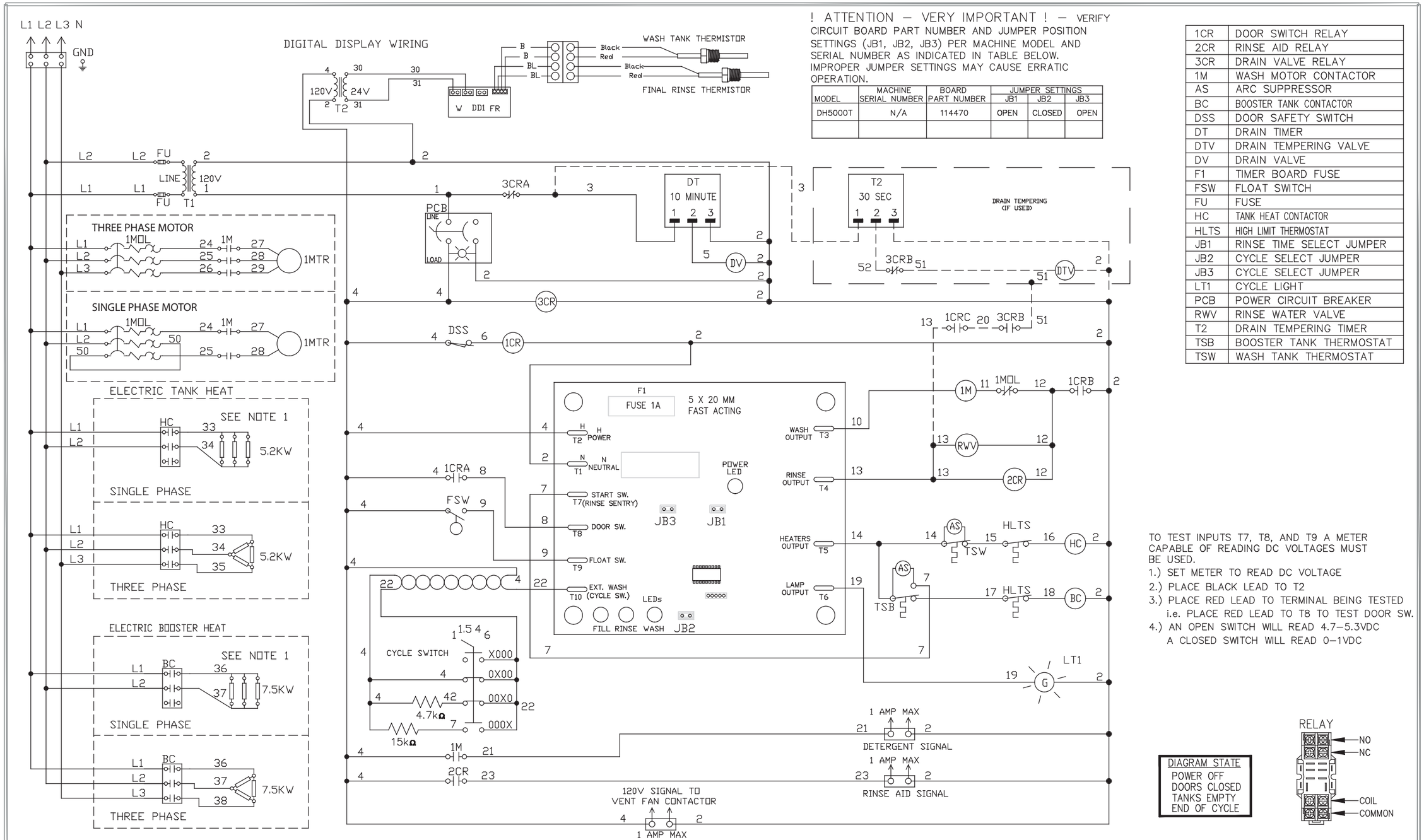

! ATTENTION – VERY IMPORTANT ! – VERIFY CIRCUIT BOARD PART NUMBER AND JUMPER POSITION SETTINGS (JB1, JB2, JB3) PER MACHINE MODEL AND SERIAL NUMBER AS INDICATED IN TABLE BELOW. IMPROPER JUMPER SETTINGS MAY CAUSE ERRATIC OPERATION.

MODEL	MACHINE SERIAL NUMBER	BOARD PART NUMBER	JUMPER SETTINGS JB1	JB2	JB3
DH5000T	N/A	114470	OPEN	CLOSED	OPEN

1CR	DOOR SWITCH RELAY
2CR	RINSE AID RELAY
3CR	DRAIN VALVE RELAY
1M	WASH MOTOR CONTACTOR
AS	ARC SUPPRESSOR
BC	BOOSTER TANK CONTACTOR
DSS	DOOR SAFETY SWITCH
DT	DRAIN TIMER
DTV	DRAIN TEMPERING VALVE
DV	DRAIN VALVE
F1	TIMER BOARD FUSE
FSW	FLOAT SWITCH
FU	FUSE
HC	TANK HEAT CONTACTOR
HLTS	HIGH LIMIT THERMOSTAT
JB1	RINSE TIME SELECT JUMPER
JB2	CYCLE SELECT JUMPER
JB3	CYCLE SELECT JUMPER
LT1	CYCLE LIGHT
PCB	POWER CIRCUIT BREAKER
RWV	RINSE WATER VALVE
T2	DRAIN TEMPERING TIMER
TSB	BOOSTER TANK THERMOSTAT
TSW	WASH TANK THERMOSTAT

TO TEST INPUTS T7, T8, AND T9 A METER CAPABLE OF READING DC VOLTAGES MUST BE USED.

1.) SET METER TO READ DC VOLTAGE
2.) PLACE BLACK LEAD TO T2
3.) PLACE RED LEAD TO TERMINAL BEING TESTED
i.e. PLACE RED LEAD TO T8 TO TEST DOOR SW.
4.) AN OPEN SWITCH WILL READ 4.7–5.3VDC
A CLOSED SWITCH WILL READ 0–1VDC

DIAGRAM STATE
POWER OFF
DOORS CLOSED
TANKS EMPTY
END OF CYCLE

RELAY
NO
NC
COIL
COMMON

CUSTOMER TO SUPPLY RATED VOLTAGE/PHASE/Hz, AS SPECIFIED PER ORDER, TO DISCONNECT SWITCH. ALL POWER SUPPLIED TO EACH CONNECTION POINT MUST COMPLY WITH ALL LOCAL ELECTRIC CODES.

DR.BY	J. MCALLISTER	SCALE	NONE
DATE	04/05/12	SHEET 1 OF 1	

REV.	DESCRIPTION	DATE	BY
A	CHANGED 1CR TO THREE POLE RELAY	25FEB13	JAM

REV.	DESCRIPTION	DATE	BY

Champion
The Dishwashing Machine Specialists

DH5000T – TALL HOOD DOOR MACHINE – 1 & 3 PHASE

B 702743 REV. A

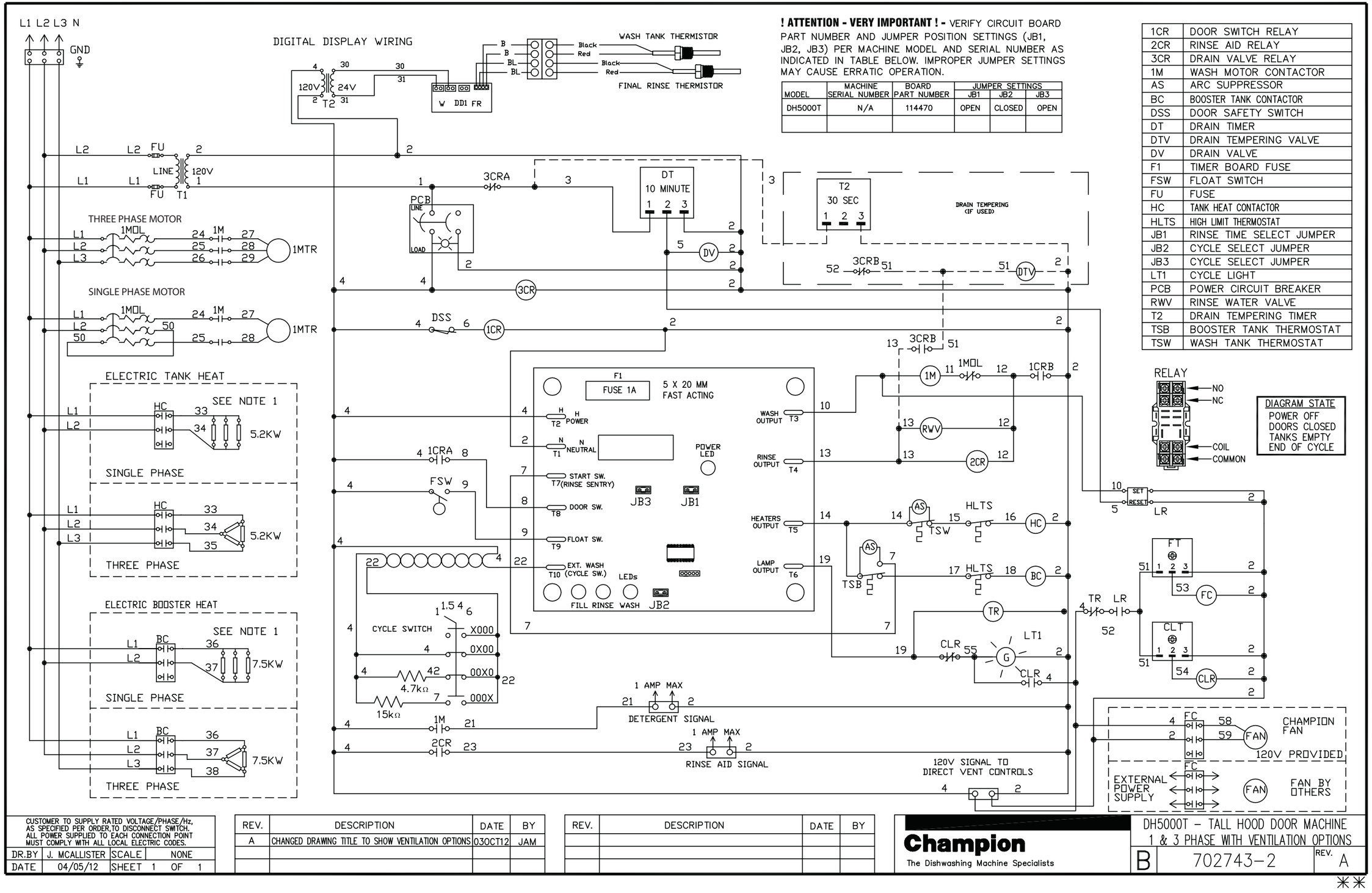

! ATTENTION - VERY IMPORTANT ! - VERIFY CIRCUIT BOARD PART NUMBER AND JUMPER POSITION SETTINGS (JB1, JB2, JB3) PER MACHINE MODEL AND SERIAL NUMBER AS INDICATED IN TABLE BELOW. IMPROPER JUMPER SETTINGS MAY CAUSE ERRATIC OPERATION.

MODEL	MACHINE SERIAL NUMBER	BOARD PART NUMBER	JUMPER SETTINGS JB1	JB2	JB3
DH5000T	N/A	114470	OPEN	CLOSED	OPEN

1CR	DOOR SWITCH RELAY
2CR	RINSE AID RELAY
3CR	DRAIN VALVE RELAY
1M	WASH MOTOR CONTACTOR
AS	ARC SUPPRESSOR
BC	BOOSTER TANK CONTACTOR
DSS	DOOR SAFETY SWITCH
DT	DRAIN TIMER
DTV	DRAIN TEMPERING VALVE
DV	DRAIN VALVE
F1	TIMER BOARD FUSE
FSW	FLOAT SWITCH
FU	FUSE
HC	TANK HEAT CONTACTOR
HLTS	HIGH LIMIT THERMOSTAT
JB1	RINSE TIME SELECT JUMPER
JB2	CYCLE SELECT JUMPER
JB3	CYCLE SELECT JUMPER
LT1	CYCLE LIGHT
PCB	POWER CIRCUIT BREAKER
RWV	RINSE WATER VALVE
T2	DRAIN TEMPERING TIMER
TSB	BOOSTER TANK THERMOSTAT
TSW	WASH TANK THERMOSTAT

CUSTOMER TO SUPPLY RATED VOLTAGE/PHASE/Hz, AS SPECIFIED PER ORDER,TO DISCONNECT SWITCH. ALL POWER SUPPLIED TO EACH CONNECTION POINT MUST COMPLY WITH ALL LOCAL ELECTRIC CODES.

DR.BY	J. MCALLISTER	SCALE	NONE
DATE	04/05/12	SHEET 1	OF 1

REV.	DESCRIPTION	DATE	BY
A	CHANGED DRAWING TITLE TO SHOW VENTILATION OPTIONS	03OCT12	JAM

REV.	DESCRIPTION	DATE	BY

Champion
The Dishwashing Machine Specialists

DH5000T - TALL HOOD DOOR MACHINE
1 & 3 PHASE WITH VENTILATION OPTIONS

B 702743-2 REV. A

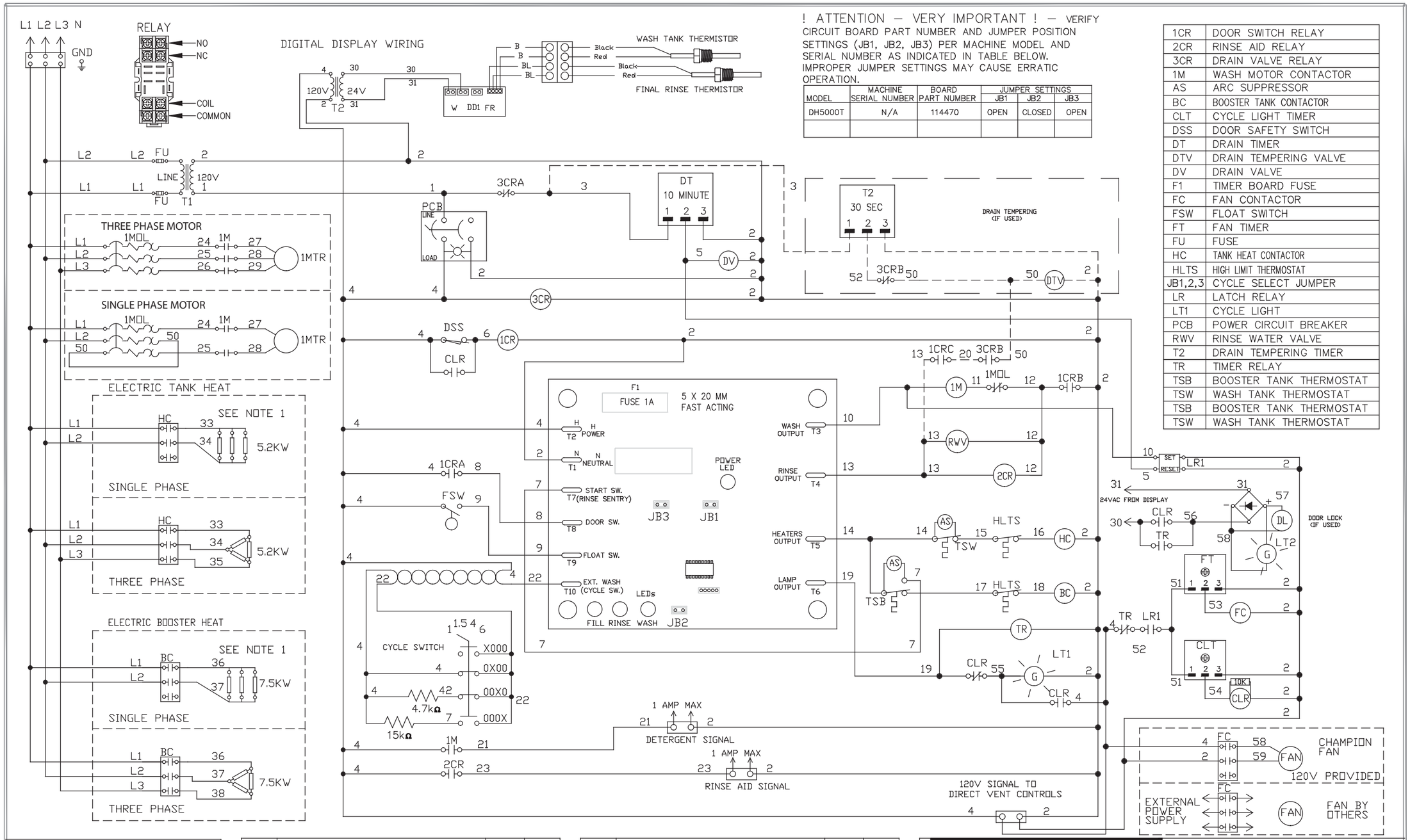

! ATTENTION – VERY IMPORTANT ! – VERIFY CIRCUIT BOARD PART NUMBER AND JUMPER POSITION SETTINGS (JB1, JB2, JB3) PER MACHINE MODEL AND SERIAL NUMBER AS INDICATED IN TABLE BELOW. IMPROPER JUMPER SETTINGS MAY CAUSE ERRATIC OPERATION.

MODEL	MACHINE SERIAL NUMBER	BOARD PART NUMBER	JUMPER SETTINGS JB1	JB2	JB3
DH5000T	N/A	114470	OPEN	CLOSED	OPEN

1CR	DOOR SWITCH RELAY
2CR	RINSE AID RELAY
3CR	DRAIN VALVE RELAY
1M	WASH MOTOR CONTACTOR
AS	ARC SUPPRESSOR
BC	BOOSTER TANK CONTACTOR
CLT	CYCLE LIGHT TIMER
DSS	DOOR SAFETY SWITCH
DT	DRAIN TIMER
DTV	DRAIN TEMPERING VALVE
DV	DRAIN VALVE
F1	TIMER BOARD FUSE
FC	FAN CONTACTOR
FSW	FLOAT SWITCH
FT	FAN TIMER
FU	FUSE
HC	TANK HEAT CONTACTOR
HLTS	HIGH LIMIT THERMOSTAT
JB1,2,3	CYCLE SELECT JUMPER
LR	LATCH RELAY
LT1	CYCLE LIGHT
PCB	POWER CIRCUIT BREAKER
RWV	RINSE WATER VALVE
T2	DRAIN TEMPERING TIMER
TR	TIMER RELAY
TSB	BOOSTER TANK THERMOSTAT
TSW	WASH TANK THERMOSTAT
TSB	BOOSTER TANK THERMOSTAT
TSW	WASH TANK THERMOSTAT

CUSTOMER TO SUPPLY RATED VOLTAGE/PHASE/Hz, AS SPECIFIED PER ORDER,TO DISCONNECT SWITCH. ALL POWER SUPPLIED TO EACH CONNECTION POINT MUST COMPLY WITH ALL LOCAL ELECTRIC CODES.

DR.BY	J. MCALLISTER	SCALE	NONE
DATE	04/05/12	SHEET 1 OF 1	

REV.	DESCRIPTION	DATE	BY
A	CHANGED DRAWING TITLE TO SHOW VENTILATION OPTIONS	03OCT12	JAM
B	ADDED 1CRB CONTACT TO DRAIN TEMPERING CIRCUIT	04APR13	JAM

REV.	DESCRIPTION	DATE	BY

Champion
The Dishwashing Machine Specialists

DH5000T – TALL HOOD DOOR MACHINE
1 & 3 PHASE WITH VENTILATION OPTIONS/DOOR LATCH

B 702743-3 REV. B

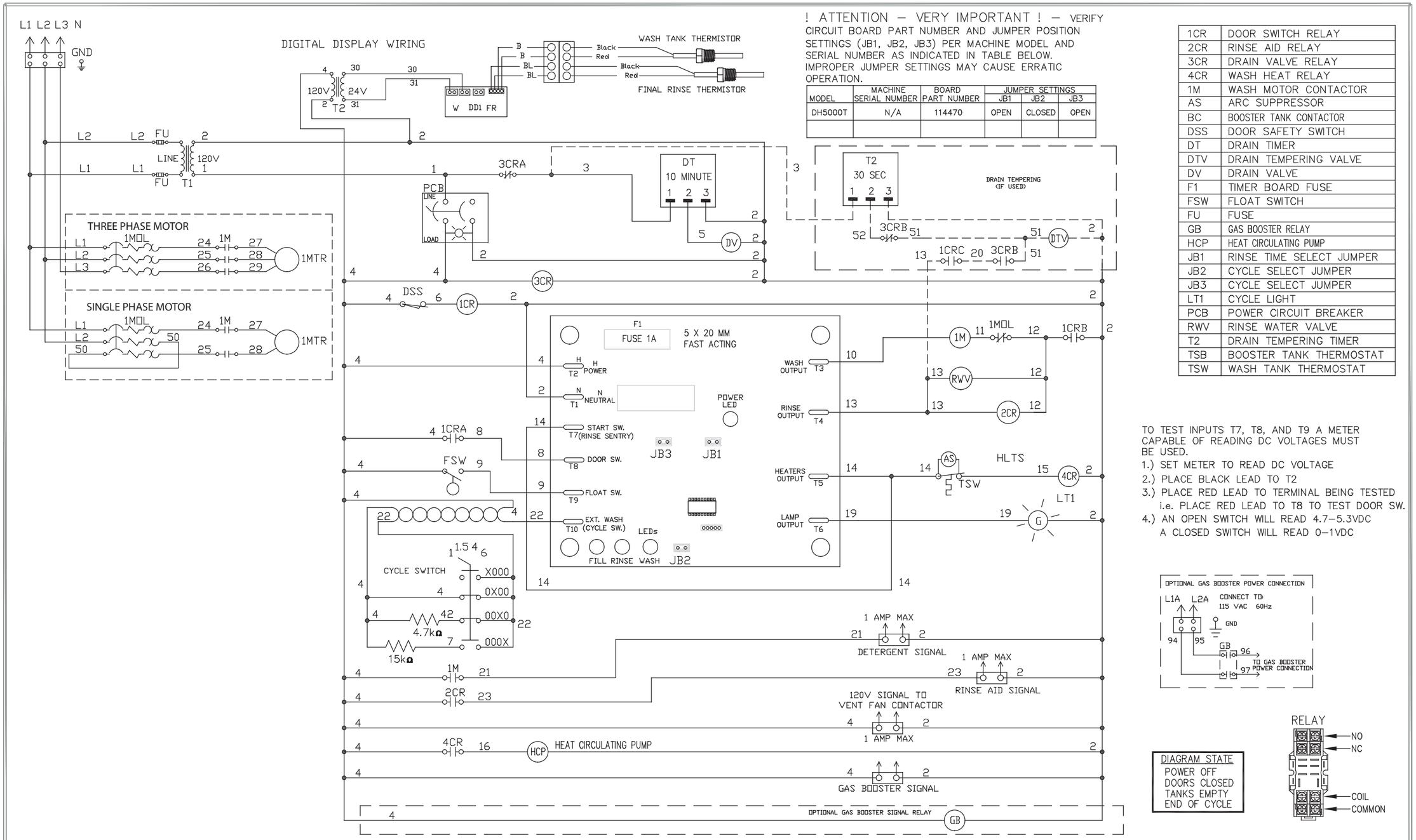

! ATTENTION – VERY IMPORTANT ! – VERIFY CIRCUIT BOARD PART NUMBER AND JUMPER POSITION SETTINGS (JB1, JB2, JB3) PER MACHINE MODEL AND SERIAL NUMBER AS INDICATED IN TABLE BELOW. IMPROPER JUMPER SETTINGS MAY CAUSE ERRATIC OPERATION.

MODEL	MACHINE SERIAL NUMBER	BOARD PART NUMBER	JUMPER SETTINGS		
			JB1	JB2	JB3
DH5000T	N/A	114470	OPEN	CLOSED	OPEN

1CR	DOOR SWITCH RELAY
2CR	RINSE AID RELAY
3CR	DRAIN VALVE RELAY
4CR	WASH HEAT RELAY
1M	WASH MOTOR CONTACTOR
AS	ARC SUPPRESSOR
BC	BOOSTER TANK CONTACTOR
DSS	DOOR SAFETY SWITCH
DT	DRAIN TIMER
DTV	DRAIN TEMPERING VALVE
DV	DRAIN VALVE
F1	TIMER BOARD FUSE
FSW	FLOAT SWITCH
FU	FUSE
GB	GAS BOOSTER RELAY
HCP	HEAT CIRCULATING PUMP
JB1	RINSE TIME SELECT JUMPER
JB2	CYCLE SELECT JUMPER
JB3	CYCLE SELECT JUMPER
LT1	CYCLE LIGHT
PCB	POWER CIRCUIT BREAKER
RWV	RINSE WATER VALVE
T2	DRAIN TEMPERING TIMER
TSB	BOOSTER TANK THERMOSTAT
TSW	WASH TANK THERMOSTAT

TO TEST INPUTS T7, T8, AND T9 A METER CAPABLE OF READING DC VOLTAGES MUST BE USED.

1.) SET METER TO READ DC VOLTAGE
2.) PLACE BLACK LEAD TO T2
3.) PLACE RED LEAD TO TERMINAL BEING TESTED i.e. PLACE RED LEAD TO T8 TO TEST DOOR SW.
4.) AN OPEN SWITCH WILL READ 4.7–5.3VDC
A CLOSED SWITCH WILL READ 0–1VDC

DIAGRAM STATE
POWER OFF
DOORS CLOSED
TANKS EMPTY
END OF CYCLE

CUSTOMER TO SUPPLY RATED VOLTAGE/PHASE/Hz, AS SPECIFIED PER ORDER,TO DISCONNECT SWITCH. ALL POWER SUPPLIED TO EACH CONNECTION POINT MUST COMPLY WITH ALL LOCAL ELECTRIC CODES.

DR.BY	J. MCALLISTER	SCALE	NONE
DATE	11JAN13	SHEET 1 OF 1	

REV.	DESCRIPTION	DATE	BY
A	CHANGED 1CR TO THREE POLE RELAY	25FEB13	JAM

REV.	DESCRIPTION	DATE	BY

Champion
The Dishwashing Machine Specialists

DH5000T – TALL HOOD DOOR MACHINE– HOT WATER HEAT

B 702743–1 REV. A

Form No. 115074_rev. A

P/N 900958
Control Box Wall Mount Kit

(for Direct Vent Option Model & Condensate Removal Option Model)

Overview:

The Direct Vent Model and the Condensate Removal Model utilize a separate control box that is interwired to the dishwasher. The standard configuration calls for this box to mounted to the left-hand side of the machine; however, the control box can be mounted to the wall if desired. The following instructions describe the steps necessary to mount the control box using the parts included in the Control Box Wall Mount Kit P/N 900958.

! VERY IMPORTANT !

The control box can only be mounted within the limits of the prewired cables connecting the control box and the dishwasher together.

Refer to Figure 2 and Figure 3 in the Installation Instructions below for additional information concerning the location of the control box.

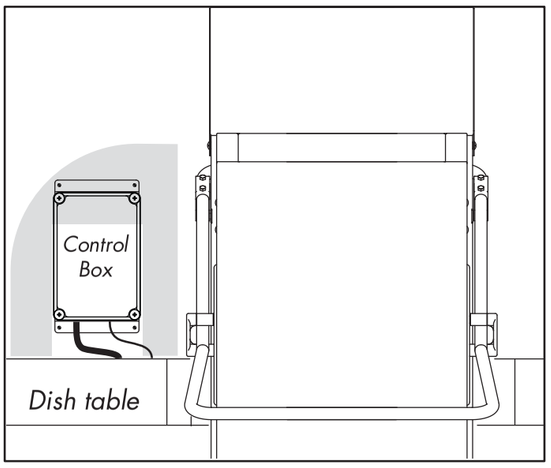

Figure 1 –
The straight-through operation machine shown with control box mounted on wall.

Installation Instructions:

1 Control Box Location

Refer to Figures 2 and 3. Note the gray and black shaded areas. The gray area indicates the approximate allowed location to mount the control box; black indicates the area where the control box must not be mounted.

In all circumstances, the mounting location of the control box must not interfere with the operation of the hood nor prevent access to the dishwasher for servicing.

The control box can only be mounted within the limits of the prewired cables connecting the control box and the dishwasher togther.

NOTE: The control box and cables weigh 10 lbs./4.1 kg.

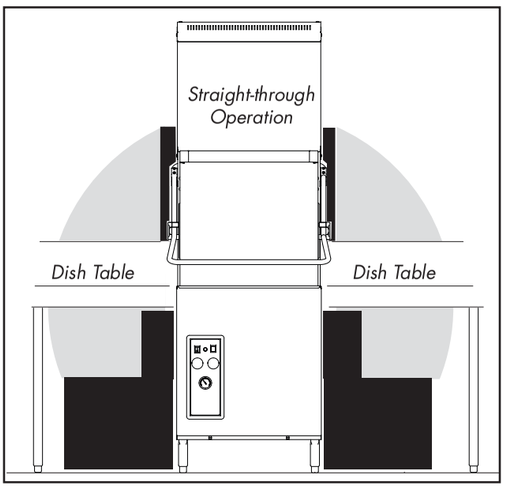

Figure 2 –
For the Straight-through Operation machine, the control box can be mounted on the right-hand or left-hand side of the machine.

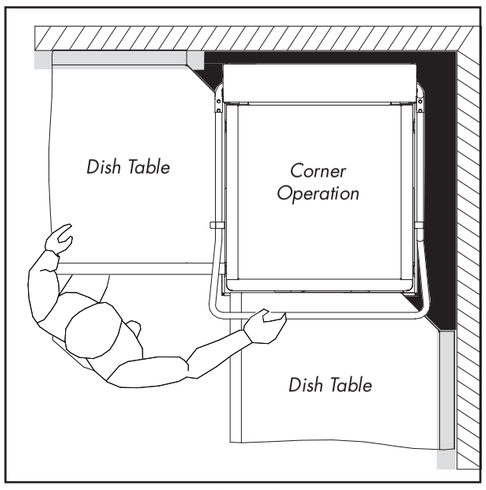

Figure 3 –
For the Corner Operation machine, do not mount the control box in the black area shown on the right-hand side machine.

2 Check the Kit parts

Refer to Table 1 at right and make sure your kit contains the parts listed.
The Wall Mount Bracket Template is located on the reverse side of this sheet.

! ATTENTION !
THE FASTENERS NEEDED TO ATTACH THE CONTROL BOX TO THE WALL ARE NOT INCLUDED IN THE KIT. THESE FASTENERS ARE SUPPLIED BY OTHERS.

TABLE 1 - Kit Parts List

Item No.	Part No.	Description	Qty.
1	334473	Bracket, Wall Mounting	2
2	100212	Screw, 10-32 x 3/4" Truss Head	4
3	115074	Template, Wall Mount Bracket (Template on reverse side of this sheet)	1

3 Mounting the Box

Refer to Figure 4:
Install the wall mount brackets (Item 1) to the back of the control box using the four screws (Item 2) supplied in the Kit.

Position the control box in the desired location & make sure the cables are not overextended.

Using the template, on the reverse side of this sheet, (Item 3), mark the location of the four mounting holes for the wall mount brackets on the supporting wall.

See Figure 5:
The control box assembly weighs 10 lbs./4.1 kg and must be mounted with the appropriate fasteners for the type of supporting wall. The fasteners are supplied by others.

The control box installation is complete.

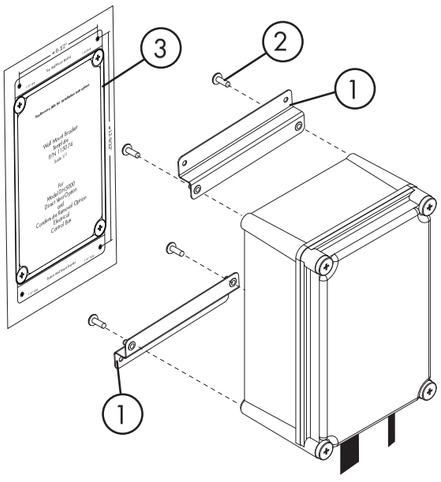

Figure 4 –
The location of the control box must be mounted within the limits of the interconnecting cables without overextending the cables.

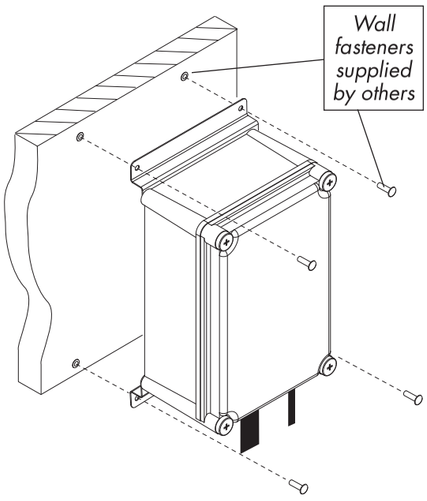

Figure 5 –
The control box assembly weighs 10 lbs/4.1 kg and must be mounted with the appropriate fasteners for the type of supporting wall. The fasteners are supplied by others.

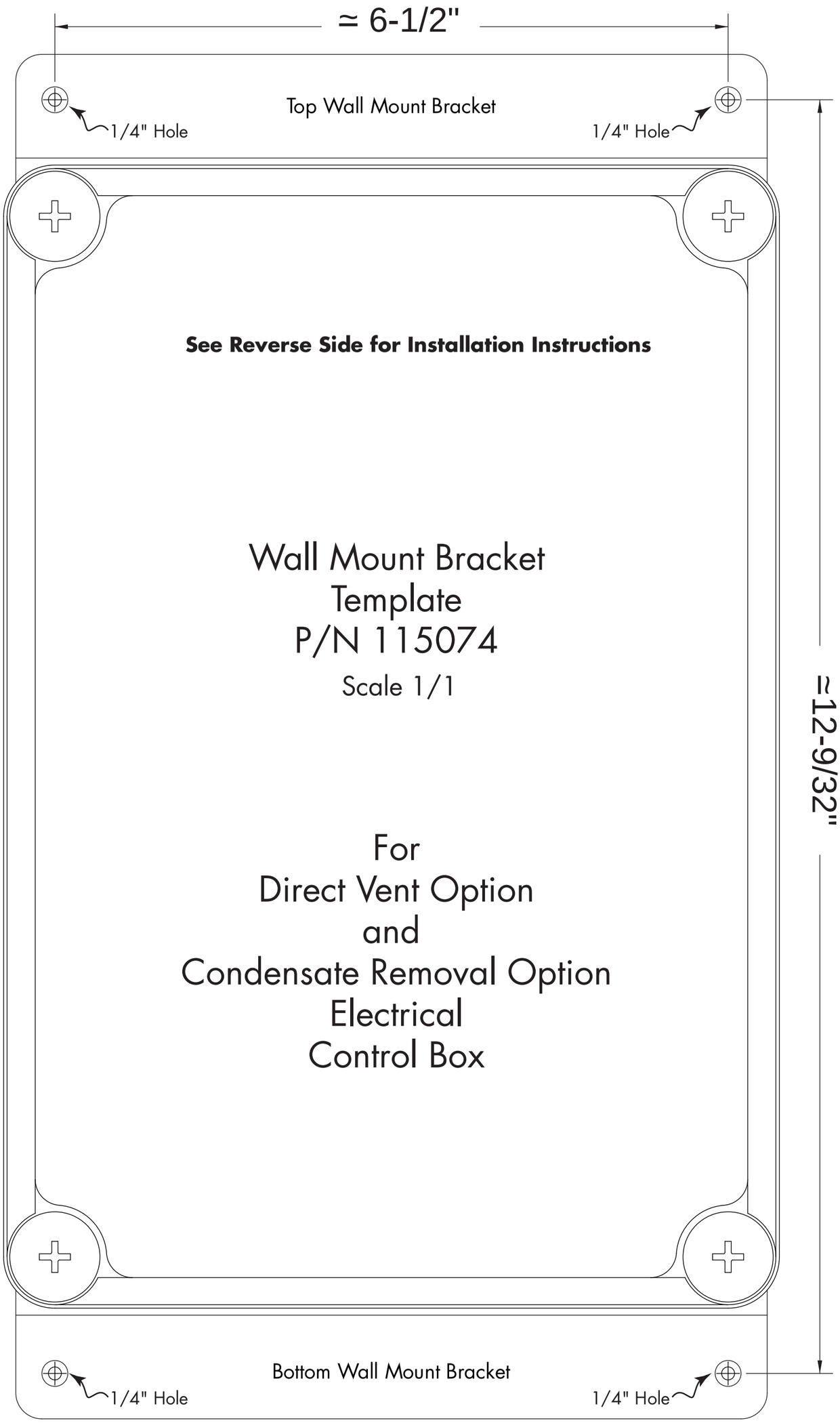

Form No. 115074_ rev. A