MOYER DIEBEL®
Simply Engineered Better

Project _____
Item No. _____
Quantity _____

MD66+

High Temperature Rack Conveyor Dishwashing Machine

STANDARD FEATURES

- **44" Single Tank + 22" Prewash**
- **All Stainless Steel Heavy Gauge Construction** including base, legs and feet
- **Single-Piece Hood Design**
- **Fully Insulated Doors** open a full 180° for unrestricted cleaning access
- **Enclosure Panels** (front and sides)
- **20" Standard Vertical Clearance** accommodates 18" x 26" sheet pans
- **Perpetual Rack Advance System** with digital jam monitoring, and mechanical drive protection
- **209 Racks Per Hour**
- **Programmable Machine Dwell** pauses rack in wash zone for extended cleaning, NSF Certified Pot & Pan Mode
- **Automatic Tank Fill & Drain Valve**
- **2 HP Pump Motor** with stainless steel impeller
- **0.48 Gallons/Rack With Energy Sentinel** (idle pump shut-off)
- **Automated Delime Function** with user-customizable alert intervals
- **Vent Fan Control**
- **Single-Piece Scrap Screen** more robust and faster cleaning
- **Single-Piece Stainless Steel Upper And Lower Wash Arm Manifolds**
- **Advanced Touchscreen Display** intuitive condition alerts, with user friendly cleaning and operation visual guidance, multi-lingual
- **Enhanced Visual On-board Diagnostics** quickly identify machine faults for rapid resolution and less downtime
- **Factory Authorized Start-Up**

SPECIFIER STATEMENT

Specified unit will be Moyer Diebel MD66+ Rack Conveyor Dishwashing Machine.

Features include: chemical connections, vent fan interlock and table limit switch connections, energy sentinel, vent cowls with stack and anti-jam conveyor drive system.

1 year parts and labor warranty.

OPTIONS & ACCESSORIES

- ☐ Drain water tempering kit (unmounted)
- ☐ Table limit switch
- ☐ Flanged Feet
- ☐ Water Hammer Kit
- ☐ Water Pressure Reducing Valve (when booster not selected)
- ☐ Water Softener (Kinetico)
- ☐ Dish Racks (Flat & Peg)
- ☐ 24" Side Loader
- ☐ 30" Side Loader
- ☐ M-90B Unloader Only
- ☐ 64" Roller Table
- ☐ 84" Roller Table

Moyer Diebel – USA
3765 Champion Blvd, Winston-Salem, NC 27105 Tel: 336-661-1992 Fax: 336-661-1979 800-228-8350
www.moyerdiebel.com

Printed in USA

MD66+ RACK CONVEYOR DISHWASHER

MOYER DIEBEL®
Simply Engineered Better

MD66+

High Temperature Rack Conveyor
Dishwashing Machine

UTILITIES

1	**Electrical Connections** Machine electrical connection and booster electrical connection
2	**Hot Water** 25 PSI flowing pressure (machine with built-in booster) Main connection 1/2" NPT with 110° incoming water (Initial Fill = 26 Gal)
4	**Hot Water** 20 PSI flowing pressure (machine with no booster) Main connection 1/2" NPT with 180° incoming water (Initial Fill = 26 Gal)
5A	**Drain** Connection 1-1/4" NPT Drain Max Flow Rate (g/min) 15
8	**Vents** A Stack connection – load end 150 CFM @ 1/4" static pressure B Stack connection – unload end 400 CFM @ 1/4" static pressure

Warning: Plumbing and electrical connections should be made by qualified personnel who will observe all the applicable plumbing, sanitary, and safety codes and the National Electrical Code.

Note: Water Hammer Arrestor (meeting ASSE-1010 standard or equivalent) to be supplied (by others) in common water supply line at service connection.

Plumbing Notes: Because of the variation in house-supplied water pressures and water pressure regulating valves (PRVs) may be needed. (Water PRV is standard on machines with booster.) The PRVs can either be purchased from Champion or obtained locally.

Champion does not endorse using on-demand (tankless) water heating systems, as well as PEX and other plumbing materials that may limit water flow, as these could impair machine performance. For optimal results, we recommend using appropriately sized conventional hot water tanks and standard copper water supply lines that adhere to our specifications. Not following these recommendations may void the manufacturer's warranty.

Water hardness of 3 grains/US Gal (0.83 Imp Gal) - 5.3 Mg/L or less

Venting Notes: Fabricated duct size: 3-7/8" x 15-7/8" (outside dimensions)

Optional Drain Tempering: 1/2" NPT cold water connection required. 1/2" NPT drain connection from back flow preventer to house drain. (FIELD INSTALLED and PLUMBED).

SPECIFICATIONS

Capacity	
Racks per hr (NSF rated)	209
Wash tank (US gal.)	17
Prewash tank (US gal.)	9
Conveyor speed (ft/min)	5.8
Conveyor speed Pot/Pan Mode (ft/min) (only one rack at a time in pot/pan)	4.5
Motor Horsepower	
Drive	1/6
Wash	2
Prewash	2
Water Consumption	
US Gal. per hr (max. use)	100
US Gal. per rack	0.48
Heating	
Tank Heat, electric (kW)	15
Electric booster (built-in) (kW supplied for 40°F rise)	12
Electric booster (built-in) (kW supplied for 70°F rise)	21
Booster heaters completely inter plumbed, controls are interwired.	
Venting	
Load end (minimum CFM)	150
Unload end (minimum CFM)	400
Standard 20"x 20" Rack Complement	
Peg	1
Flat	1

Single Tank PRO Rack Machine and Booster Ratings

The tables below give the ratings for each model. The ratings include the requirements of the 12 and 21 kW booster heaters when they are in use.

Machines with a single point electrical connection:

66+ Electric Tank Heat, 21 kW 70° Booster

Elec. Specs	Rated Amps	Minimum Supply Ckt. Conductor Ampacity	Maximum Overcurrent Protective Device
208/60/3	116	150	150
240/60/3	101	150	150
480/60/3	50	70	70

66+ Electric Tank Heat, 12 kW 40° Booster

Elec. Specs	Rated Amps	Minimum Supply Ckt. Conductor Ampacity	Maximum Overcurrent Protective Device
208/60/3	91	125	125
240/60/3	79	100	100
480/60/3	39	50	50

66+ Electric Tank Heat, No Booster

Elec. Specs	Rated Amps	Minimum Supply Ckt. Conductor Ampacity	Maximum Overcurrent Protective Device
208/60/3	58	80	80
240/60/3	50	70	70
480/60/3	25	35	35

Machines with a dual point electrical connection:

66+ Electric, 21 kW Booster Only

Elec. Specs	Rated Amps	Minimum Supply Ckt. Conductor Ampacity	Maximum Overcurrent Protective Device
208/60/3	59	80	80
240/60/3	51	70	70
480/60/3	26	35	35

66+ Electric, 12 kW Booster Only

Elec. Specs	Rated Amps	Minimum Supply Ckt. Conductor Ampacity	Maximum Overcurrent Protective Device
208/60/3	34	45	45
240/60/3	29	40	40
480/60/3	15	20	20

Note:

Machine ships as a single point electrical connection standard.
Easily converted to a dual point connection by a qualified electrician.

The machine ships standard with a 70°F booster when a booster is specified, but it is field convertible to a 40°F rise. See the installation packet or manual for conversion instructions.

Moyer Diebel – USA
3765 Champion Blvd., NC 27105
336-661-1979 • Fax: 336-661-1979

www.moyerdiebel.com

WELBILT
an Ali Group Company

MD66+ RACK CONVEYOR DISHWASHER

MOYER DIEBEL®
Simply Engineered Better

MD66+

High Temperature Rack Conveyor
Dishwashing Machine

Shipping weight crated: **900 lbs.**

Dimensions shown in inches (in)

Front View: Left to Right Model L-R

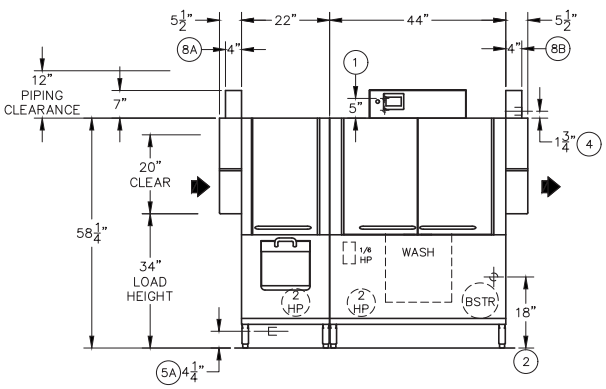

Front View: Right to Left Model R-L

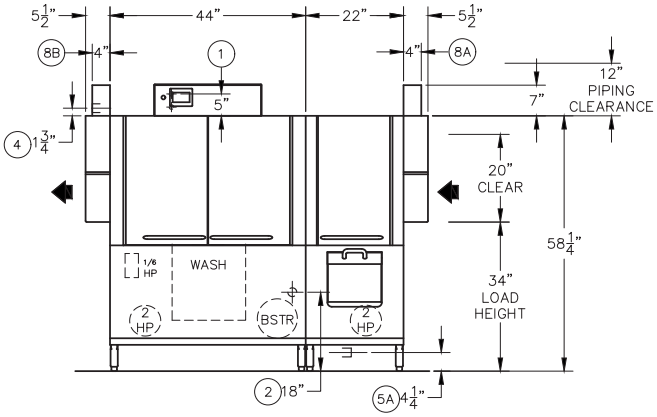

Plan View: Left to Right Model L-R

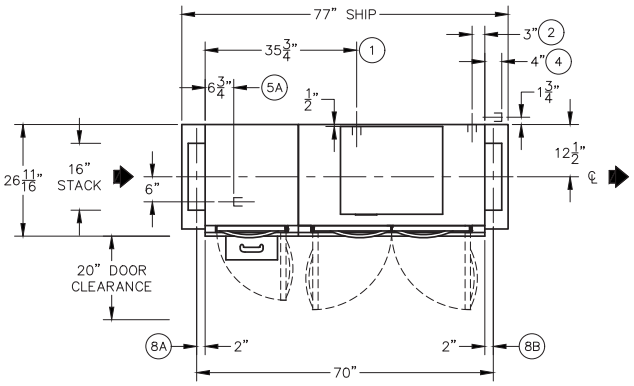

Plan View: Right to Left Model R-L

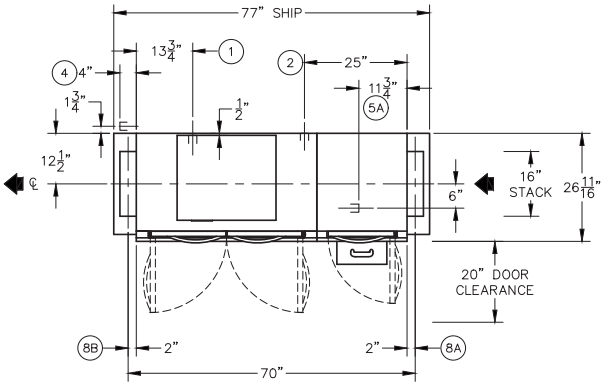

End View

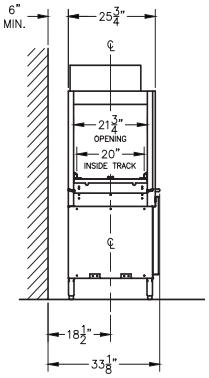

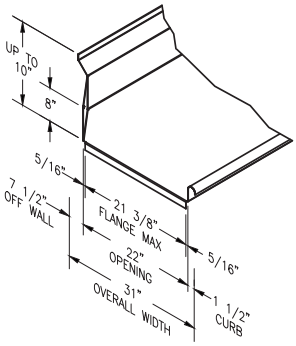

Suggested Table Construction

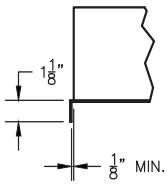

Flange Details

Moyer Diebel – USA
3765 Champion Blvd., NC 27105
336-661-1979 • Fax: 336-661-1979

www.moyerdiebel.com

WELBILT
an Ali Group Company