18" Sectional Range
French Hot Top

Job _____ Item# _____

Platinum

❑ P18N-F (Modular Mount)
❑ P18C-F (Cabinet Base)

Standard Features

- Standard (2) years limited parts and labor warranty (reference http://www.southbendnc.com/service.html for limited warranty details).
- 18" wide sectional range with french hot top available with cabinet base, or as a modular unit (for mounting on countertop, refrigerated or freezer base)
- One 40,000 BTU NAT (35,000 BTU LP) burner
- Battery spark ignition
- Removable steel plate with center surface temperature up to 900°F at the center
- High/Low setting
- 9-1/4" deep front rail
- Stainless steel front, sides, rear and exterior bottom
- Fully insulated lining and burner box
- 1-1/4" front gas manifold and 1" rear gas connection
- 5" high stainless steel flue riser
- Free battery-design assistance

Standard Features of Cabinet-Base Model

- Stainless steel cabinet with removable door.

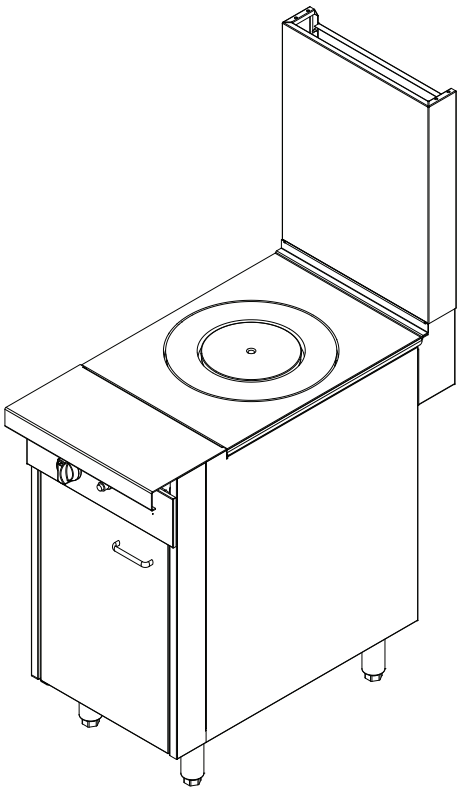

Model P18C-F with optional 24" flue riser

STANDARD CONSTRUCTION SPECIFICATIONS

Exterior Finish: Front, sides, rear and exterior bottom constructed of #3 polished 430 and 304 stainless steel.

Range: 18"-wide front-manifold sectional range with french hot top with a 40,000 BTU NAT (35,000 BTU LP) burner. Removable steel plate and an operating surface temperature of up to 900°F (482°C).

Front Rail: 9-1/4" deep front rail.

Flue Riser: 5" high stainless steel flue riser

Battery: Unit can be in any position in a battery. If the unit is at the end of the battery, the end side will be solid (rather than have a coverplate over the end of the front manifold).

Legs: 6" stainless steel adjustable legs standard.

Model 36C: Stainless steel cabinet base with one removable door.

Models: ☐ P18N-F ☐ P18C-F

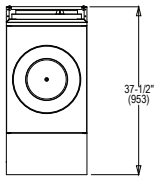

TOP VIEW

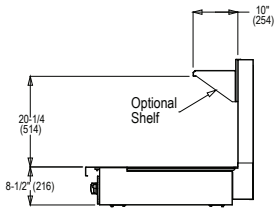

SIDE VIEW of MODULAR MODEL

Solid shelving has a depth of 10".

Tubed and Tray shelving have a depth of 11-1/8".

Shipping Crate Dimensions & Weight					
Model	Width	Height	Depth	Volume	Weight
P18N-F	20" (508)	21" (533)	42.5" (1080)	10.3 cu ft (0.29 cu m)	240 lbs (108.9 kg)
P18C-F	20" (508)	45" (1143)	42.5" (1080)	22.1 cu ft (0.63 cu m)	270 lbs (122.5 kg)

Dimensions shown in inches and (millimeters)

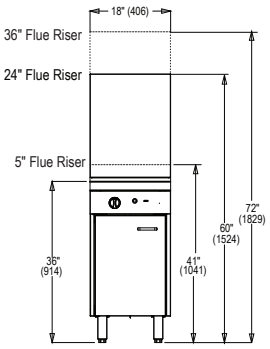

FRONT VIEW

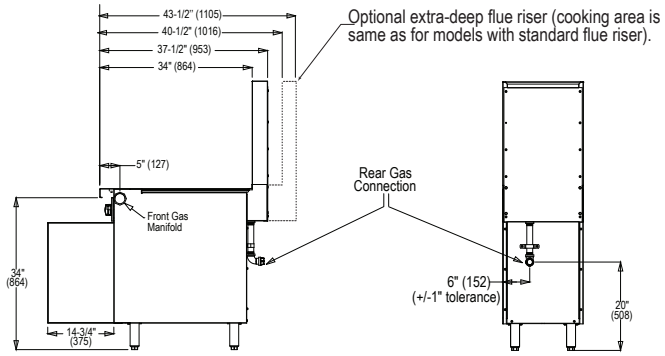

SIDE VIEW

REAR VIEW

UTILITY INFORMATION

Model	Gas (BTU/hour)	
	Natural	Propane
P18N-F	40,000	35,000
P18C-F	40,000	35,000

GAS: Each unit has a 1-1/4" front manifold that couples to the adjacent sectional unit(s), and a 1" rear gas connection with a male NPT connector. Minimum gas supply pressure is 7" W.C. for natural gas and 11" W.C. for propane. All sectional units require a regulated gas supply (a pressure regulator must be ordered separately). If using a flexible-hose gas connection, the inside diameter of the hose must not be smaller than the connector on the unit and must comply with ANSI Z21.69, providing an adequate means of restraint to prevent undue strain on the gas connection.

MISCELLANEOUS

- If casters are used with a flexible-hose gas connection, a restraining device should be used to prevent undue strain on the hose.
- Minimum clearance from noncombustible construction is zero (except there must be 2" clearance behind the blower motor of convection-oven models). Minimum clearance from combustible construction is 6" (152 mm) on sides and 6" (152 mm) on rear.
- Installation under a vented hood is recommended.
- Check local codes for fire and sanitary regulations.

NOTICE:

Southbend has a policy of continuous product research and improvement. We reserve the right to change specifications and product design without notice. Such revisions do not entitle the buyer to corresponding changes, improvements, additions or replacements for previously purchased equipment.

OPTIONS and ACCESSORIES

- ❑ External pressure regulator
- ❑ Front rail options:
  - ❑ Cutouts in front rail for sauce pans
  - ❑ 7-1/4" deep front rail (to match old style sectional)
  - ❑ Square belly bar mounted on 7-1/4" deep front rail
- ❑ Casters (front two casters lock)
- ❑ Cable restraint kit (to restrict movement when on casters)
- ❑ 24" or 36" high flue riser
- ❑ Shelves on flue riser (one on 24" flue riser, one or two on 36" flue riser, 10" deep)
- ❑ Tray or tubular shelving (12" deep)
- ❑ Open-frame base with casters for battery
- ❑ Extra-deep rear-extending flue riser
- ❑ Salamander or cheesemelter mounted on 36" high flue riser
- ❑ Removable shelf inside cabinet

INTENDED FOR COMMERCIAL USE ONLY.
NOT FOR HOUSEHOLD USE.

1100 Old Honeycutt Road, Fuquay-Varina, NC 27526
(919) 762-1000 www.southbendnc.com