SPACEMAN USA

Commercial Ice Cream & Frozen Beverage Equipment

Machine Manual

Model SM-6378H

Soft Serve - Floor Standing - Two Flavor + Twist

Customer Service
Sunday – Saturday
8 AM – 5 PM Mountain

Toll-Free: +1 (888) 610-5520
Local: +1 (720) 328-1020

service@spacemanusa.com

Spaceman USA, LLC
226 Commerce Street
Suite B
Broomfield, CO 80020

Sales and Product Information
Monday – Friday
8 AM – 5 PM Mountain

Toll-Free: +1 (888) 610-5520
Local: +1 (720) 328-1020

sales@spacemanusa.com
info@spacemanusa.com

Introduction

Welcome to your machine:

Welcome to your Spaceman USA Model 6378H soft serve machine, engineered and designed to provide dependable operation and a consistent, quality product:

- Two-flavor floor soft serve machine, with flavor-twist capability and portion control
- Independent digital controls for automatic regulation and maximum customization
- Approved for dairy and nondairy products
- Hopper refrigeration to maintain product temperature below 40°F (4°C)
- Digital viscosity-control system to adjust and maintain product consistency

This machine manual is intended to instruct users on the installation, operation, cleaning, and routine maintenance procedures. Information contained in this manual may be subject to change. Please check online or contact Spaceman USA Technical Support at (720) 328-1020 for continued updates, training, and detailed information about your Spaceman machine.

Look out for these icons:

WARNING: Denotes an action that WILL cause harm to the operator or machine if performed incorrectly.

CAUTION: Informs the operator of a task that may lead to harm if protocol is not properly performed.

IMPORTANT: Represents a vital mechanical step or note that the user must be aware of.

NOTE: Non-hazard, but pay extra attention.

Green boxes throughout the manual represent instructions for machines with air pumps. Users without air pumps can disregard these boxes.

Follow instructions to be safe:

CAUTION: This machine has many built-in safety features to protect the operator while the machine is running.

Be cautious and follow instructions carefully when operating, cleaning, and servicing the machine.

All personnel operating this machine **MUST** read and understand this manual in its entirety. Failure to comply with this manual may damage the machine and cause severe injury to the operator.

Table of Contents

What do you want to do?

Learn about the manual 1

Quickly refresh your knowledge on basic machine operation and parts 3

Ensure installation requirements 5

Unpack machine 6

Perform routine maintenance 7

Clean 8

Drain frozen product 8

Disassemble parts 9

Wash parts 11

Assemble parts 13

Sanitize 15

Manage frozen product 17

Add product to machine 17

Freeze product 18

Dispense product 18

Reset machine after freeze-up 18

Use STANDBY mode for breaks in machine use 19

Adjust and maintain product consistency 19

Change product temperature in hoppers 20

Change date and time 20

Adjust advanced settings 20

Troubleshoot problems 21

View machine specifications, including parts and wiring diagrams..... 23

Quick Operation Refresh

WARNING: The Quick Operation Refresh is for experienced 6378H operators and for reference **ONLY**. Detailed start-up instructions **MUST** be followed to ensure proper installation, cleaning, and operation of the machine. Failure to do so may result in **severe** damage or injury.

Installation and Setup

1. Unpack and inspect machine, parts, and accessories.
2. Place machine in appropriate food preparation area. Comply with all installation requirements (Page 7).
3. Read and understand ALL safety and standard operating procedures.

Cleaning and Preparation

4. Fully disassemble machine, and prepare parts for cleaning.
5. Thoroughly clean and scrub machine hoppers, cylinders, and all parts.
6. Lubricate and re-assemble all machine parts.
7. Fully sanitize machine.

Operation

8. Prepare product in a separate container, and ensure product is thoroughly mixed.
9. Add product to hoppers and prime the cylinder using the prime plug.
10. Turn machine to FREEZE mode, and wait for product to reach frozen consistency.
11. Slightly adjust viscosity setting as necessary to adjust product firmness.

MACHINE PARTS

Dispensing Door (1), with Beater Rods (2)

Dispensing-Door Gaskets (2)

Beater Guides (2)

Side Draw Valves (2), with O-Rings (4)

Middle Draw Valve (1), with H-Ring (1)

Hand Screws (2 Short, 2 Long)

Draw Handles (3), with Adjusting Screws (3)

Star Caps (3)

Retention Pin (1), with Nut (1)

Prime Plugs (2), with O-Rings (4)

Beaters (2)

Scraper Blade Clips (4)

Scraper Blades (4)

Beater Shoes (2 Left and 2 Right)

Drive Shafts (2)

Drive Shaft Gaskets (2)

Hopper Lids (2)

Air Tubes (2) and Caps (2)

Hopper Agitators (2) (if included)

O-Ring Removal Tool (1)

Brush Kit (1)

Internal Drip Tray (1)

Front Drip Tray (1), with Splash Shield (1)

Air Pump Assembly (if included)

Installation Requirements

Electrical requirements

In the United States, it is required that this machine be installed in compliance with the National Electrical Code (NEC), ANSI/NFPA 70-1987 to practically safeguard persons and property from hazards arising from the use of electricity. The unit must be installed into a properly grounded receptacle for the cord and plug provided. The machine is labeled with detailed electrical specifications. Refer to the wiring diagrams for the correct power connections.

Refrigerant requirements

Spaceman USA requires that only the specified refrigerant be used in your machine. Alternative refrigerants may cause damage to the cooling system and/or prevent the machine from operating at optimal performance. If you require an alternative refrigerant, please call Spaceman USA Technical Support for a list of compatible alternatives for your compressor.

Main compressor: 2x 6500 BTU, R404A

Machine placement requirements

CAUTION: The machine must be placed on a level surface away from walls and other objects. Failure to comply will damage the machine and refrigeration components and will void all warranties.

CAUTION: The machine is designed to operate in normal ambient temperatures of 60 to 75°F. Operating in higher ambient temperatures will result in degraded performance.

- Place on a flat, level, and solid surface fitted to the machine dimensions.
- Ensure a minimum 6-inch clearance on all sides, front, and back.
- Completely clear area of dust, grease, and airborne particles.
- Place away from hot equipment such as stoves, frying baskets, ovens, etc.

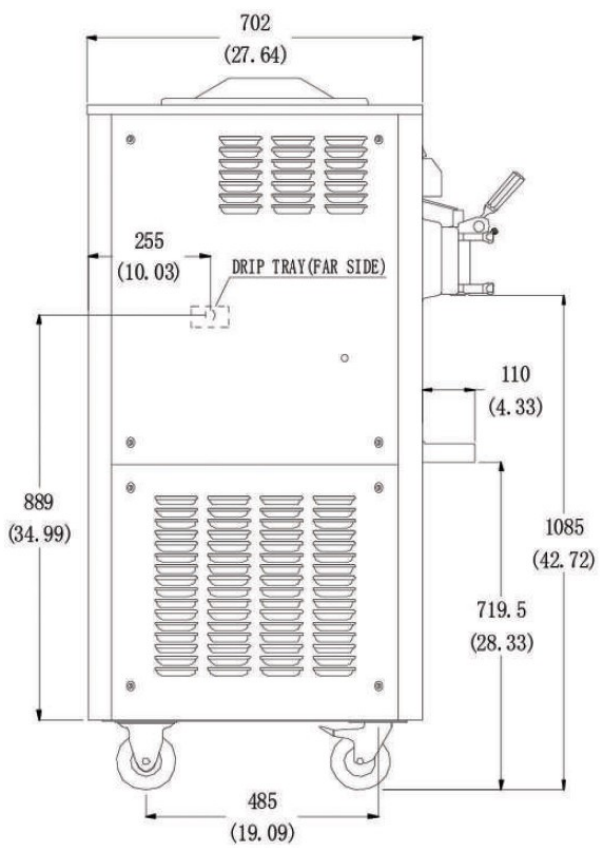

1. Unpalletize Machine

Unpalletizing requires lifting.

Two or more personnel should remove the machine from its packaging and place it in its final operating location.

Failure to do so may result in severe injury or damage.

1. Cut packing straps, and remove cardboard lid and outer sides from the pallet. DO NOT cut cardboard.
2. Remove plastic wrapping around machine.
3. Cut stabilizing straps, being careful not to scratch or dent the machine panels.
4. Prepare the area where the machine will be placed, remove packing cardboard from underneath machine, and place ramp wedges near front casters.
5. Unlock front casters, and roll machine down the wedges off the pallet.
6. Place the machine in its final location according to the Installation Requirements (Page 5).

2. Check for shipping damage

Inspect the machine for any shipping damage. If you find any, contact Spaceman USA Technical Service immediately after unpalletizing. Our technicians will help you assess the damage and determine the appropriate action prior to accepting the delivery.

3. Unpack and inspect parts

Refer to the detailed parts diagrams on the back pages if necessary.

1. Remove all packaged parts and accessories from your machine.
2. Organize items on a clean table or operating area using the checklist below.

- ◯ Hopper Lids (2)
- ◯ Front Drip Tray + Splash Shield
- ◯ Dispensing Handles (3)
- ◯ Retention Pin with Nut
- ◯ Start-Up Kit
- ◯ Brush Kits (1 Large and 1 Small)
- ◯ Machine Manual

3. Inspect for damage immediately upon unpacking. and call Spaceman USA Technical Service if you discover any damaged or missing parts.
4. Clean and properly lubricate machine parts prior to machine operation.

After unpacking and inspecting the parts, you are ready to disassemble the machine and prepare for the first operation. **Read about Routine Maintenance (Page 7) carefully prior to disassembling your machine for the first time.**

Routine Maintenance

Routine Maintenance Operations:

- **Clean and Lubricate** Daily
- **Replace Wearable Parts** Every 1 to 3 months*
- **Internal Cleaning** Quarterly**

* Based on machine usage and cleaning intervals; a Tune-Up Kit is available with all wearable parts (O-rings, gaskets, etc.) except scraper blades

** Based on cleanliness of location and proximity to powder-based machines

Tune-Up Kit

For optimal machine performance and many years of efficiency and reliability from your machine, Spaceman USA recommends cleaning and sanitizing the machine and its parts **daily**. The machine comes equipped with a brush kit specifically designed to efficiently and properly clean the machine.

WARNING: If this is the first time operating the machine, you MUST clean and sanitize ALL parts prior to running the machine.

IMPORTANT: Cleaning and sanitizing schedules are governed by state or local regulatory agencies and MUST be followed accordingly. Routine maintenance MUST be performed a minimum of once every three days.

CAUTIONS:

- Do NOT run the machine without properly lubricating required parts.
- Do NOT clean the machine with abrasive or toxic chemicals and cleaners. Doing so may cause damage to the stainless steel material.
- ONLY use Spaceman-USA-included cleaning brushes and lubrication.
- NEVER use metal objects to clean or operate the machine.
- ALWAYS replace wearable parts a minimum of every 3 months.
- ALWAYS prime machine prior to operating.
- ALWAYS inspect parts for excess wear and damage.

NOTE: Additional brushes, lubrication, wearable parts, and tools can be purchased from Spaceman USA to ensure proper maintenance. Extra wearable parts (except scraper blades) are found in the Start-Up Kit.

Cleaning: 1. Drain Product

NOTES: To expedite draining, turn off machine 30 minutes prior to soften product.
To expedite process, keep a bucket nearby to temporarily store removed parts.

CAUTION: Never use warm water when rinsing the machine to prevent damage.

1. Remove hopper lids, air tubes, and (if present) agitators; ***if machine has air pumps, do not disconnect air tubes***
2. Place a bucket or other container below dispensing assembly
3. Turn power switches to ON
4. Press RESET buttons; press WASH buttons
5. Move draw handles to OPEN position (DOWN); CLOSE draw handles (UP) when product flow slows significantly
6. Press RESET buttons to pause wash cycle
7. Remove product and dispose or refrigerate it
8. Fill each hopper with one gallon of COOL water
9. Use cool water and the large brush to scrub the sides and bottom of the hoppers; *be VERY careful not to damage the low-mix sensor in the hoppers*
10. Place a bucket or other container below the dispensing assembly
11. Press WASH buttons
12. OPEN draw handles to drain water and remaining product; CLOSE when finished
13. Use the small brush kit to clean inside the feed tube at the bottom of the hoppers; ***if machine has air pumps, this step is not necessary***
14. Press RESET to pause wash cycle
15. Repeat steps 9 to 15 until water exiting the draw valves is clear and free of product

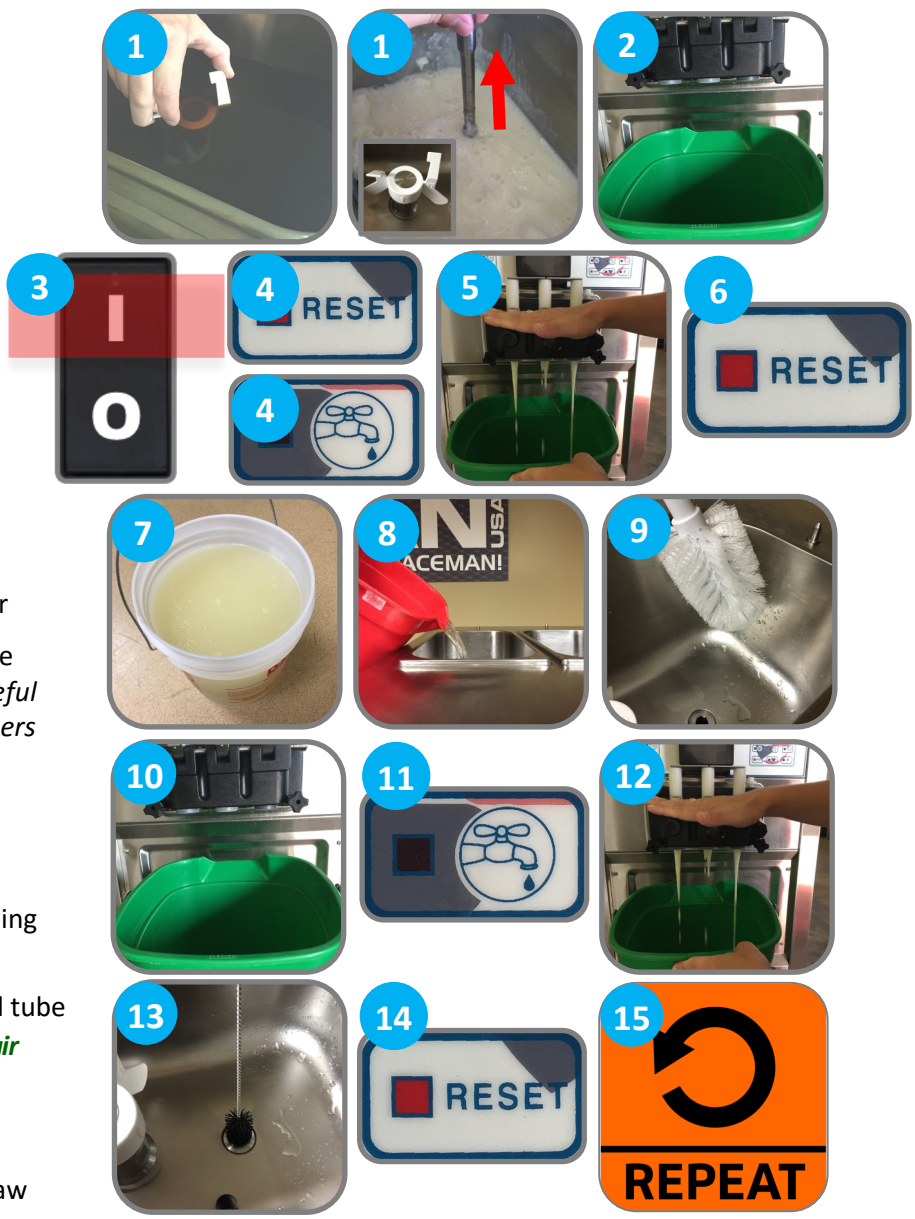

16. If machine has air pumps:
    a. Press RESET buttons
    b. OPEN draw handles (DOWN) for 10 to 15 seconds to relieve pressure in cylinders

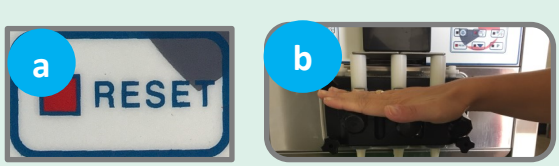

Cleaning: 2. Disassemble

NOTE: Prepare dishwashing area prior to disassembly, use bucket to temporarily store large removed parts and a small container for O-rings, and have a towel nearby to capture excess water.

CAUTION: Always separate O-rings and gaskets from metal parts to prevent damage while washing.

1. Turn power switches OFF

2. If machine has air pumps, disassemble them

a. ***OPEN draw handles to verify zero pressure in cylinders***; twist air tube connectors to unlock and disconnect air tubes

b. Take air tubes apart completely; each air tube has O-rings (3), connectors (2), and check valve (1)

c. Push in and rotate air pumps 1/4 turn clockwise; pull to remove

d. Rotate suction tubes to unlock and remove suction tubes, springs, and stoppers out of air pumps; *watch that springs don't fly out*

e. Take suction tubes apart completely; each suction tube has O-ring (1), spring (1), and stopper (1)

f. Unscrew bolts on air pump housings; separate air pump covers from shells

g. Remove gears and O-rings from shells

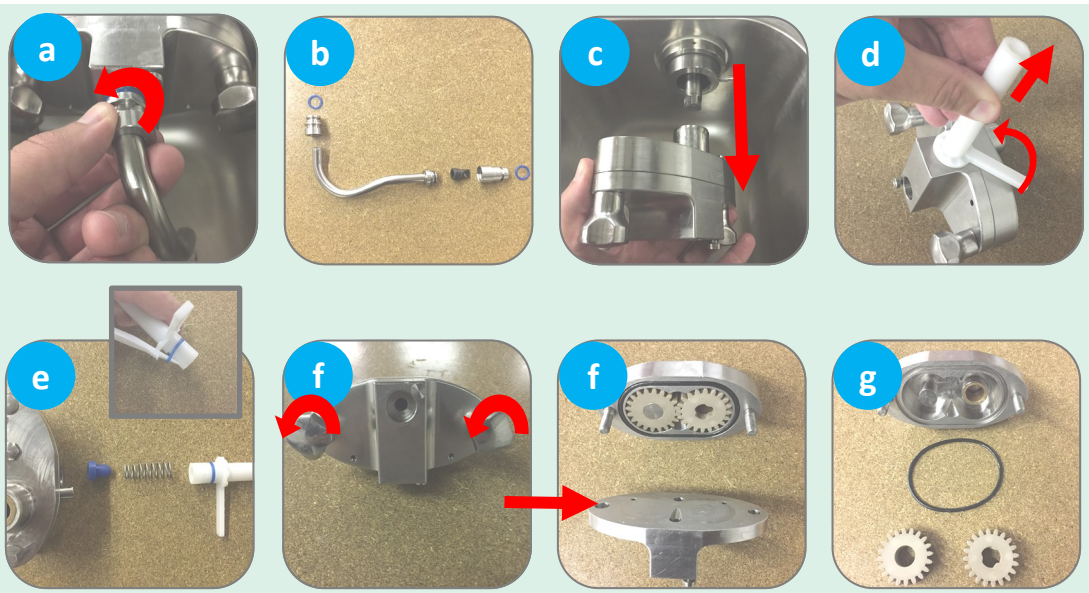

3. Remove dispensing door

a. Remove dispensing-door hand-screws (4)

b. Remove dispensing door assembly from cylinders

4. Disassemble dispensing door

a. Remove beater guides (2) from door assembly; remove gaskets (2) from door assembly using O-ring removal tool

b. Remove prime plugs (2) from door assembly; remove O-rings (4) from prime plugs using O-ring removal tool

c. Unscrew and remove retention nut; remove retention pin

d. Remove draw handles (3), pushing down first to pop up draw valves, then pulling out

e. Remove draw valves (3), *twisting while removing to prevent damage*

f. Remove O-rings (4) and H-ring (1) from draw valves using O-ring removal tool

g. Rotate star caps (3) so that tabs are accessible; snap off star caps

---

5. Disassemble beater assemblies and drive shafts

a. Remove beater assemblies (2) from cylinders

b. Remove scraper blades (4) from beater assemblies; separate scraper blade clips (4) from scraper blades

c. Pull off beater shoes (4)

d. Remove drive shafts (2) from inside cylinders using a dry towel; separate gaskets (2) from drive shafts

NOTE: If you experience assembly difficulty with drive shafts, Spaceman offers a specialized removal tool for purchase.

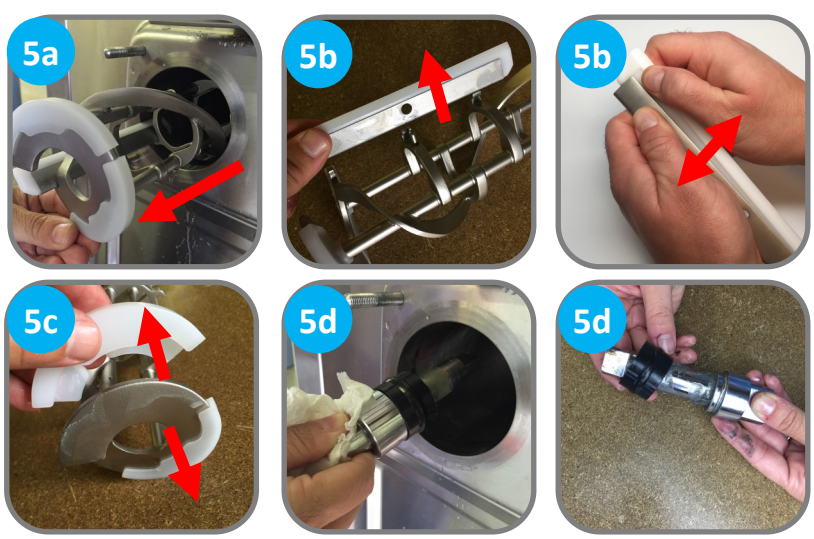

---

6. Remove internal drip tray and front drip tray + splash shield

Cleaning: 3. Wash All Parts

CAUTION: Never wash parts in a dishwasher. Always hand-wash components with nontoxic, food-safe cleaners.

1. Verify power switches are in the OFF position
2. Use the large brush and cool water to thoroughly clean inside the cylinders;
   be sure to scrub the back of the cylinders and verify the cylinders are free of ALL product
3. Thoroughly clean and dry the rear of the cylinders with the supplied black brushes and a clean, dry towel
4. Gently clean and wipe down the outside of the machine
5. Carefully and thoroughly wash all parts removed from the machine using supplied brushes, sponges, and clean towels;
   if machine has air pumps, be sure to include all air pump parts in cleaning
6. When cleaning the dispensing door assembly, clean the priming ports with a small brush
7. Carefully and thoroughly clean all gaskets and O-rings removed from the machine;
   be sure to wipe gaskets and O-rings to remove excess lubricant
8. Verify all parts are clean and free of all food product prior to re-assembling machine

Cleaning: 4. Assemble

CAUTION: Never force the installation of any parts. All parts fit correctly without force. If parts don't seem to fit, remove all parts and repeat assembly.

1. **Verify power switches are in the OFF position**

2. **Install drive shafts**
   a. Place drive shaft gaskets (2) on drive shafts (2)
   b. Seal gasket open spaces with Spaceman lubricant, extending onto drive shafts and *avoiding the top square parts*
   c. Insert drive shafts into rear shell bearings at the back of the cylinders, and turn them until the key engages firmly into the socket (when inserted correctly, the drive shaft will no longer turn 360°)

3. **Install beater assemblies**
   a. Attach beater shoes (4) onto beaters (2); when properly placed, neither shoe overhangs beater edge
   b. Install scraper blade clips (4) onto scraper blades (4)
   c. Fit scraper blades onto beaters (2)
   d. Insert beater assemblies into cylinders, *making sure beater shoes stay in place*; turn assemblies until they engage the drive shaft keys and no longer turn 360°

4. **Install dispensing door**
   a. Place O-rings (4) on side draw valves (2); place H-ring (1) on middle draw valve (1); place O-rings (4) on prime plugs (2); coat all ring areas with Spaceman lubricant
   b. Push prime plugs into holes on top of dispensing door
   c. Insert draw valves into dispensing door, O-rings-first; *middle draw valve goes in the middle and slots face outward*
   d. Set draw handles (3) into slots on dispensing door, with adjustment screws facing down
   e. Slide retention pin through draw handles; secure with nut
   f. Snap star caps (3) onto bottom of dispensing door
   g. Fit gaskets (2) into grooves on back of door, flat side out; slide beater guides (2) over beater rods (2), with flanged edges against the door
   h. Insert dispensing door assembly into cylinders, beater rods first, pushing handles all the way up as you insert

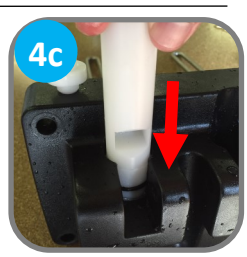

   i. Secure door assembly in a cross-pattern using hand-screws (4), with long screws (2) on top

5. If machine has air pumps, assemble and install them

a. Place O-rings on rear shells, coating with Spaceman lubricant; install gears into shells (they only fit one direction)

b. Connect covers and shells, ensuring they fit flush; secure with hand-screws

c. Place O-rings on suction tubes; lightly lubricate O-ring areas

d. Place air pump stoppers into air pump springs, verifying orientation of stopper in spring; insert into housings ***stopper-first***

e. Insert suction tubes into pumps; rotate to lock, and turn to desired overrun setting

f. Coat air pump drive shafts with Spaceman lubricant

g. Install air pumps onto machine:

—insert at an angle

—while pushing air pump in, slightly rotate back and forth until the gear engages the air pump drive shaft

—push in and rotate counter-clockwise to lock in place

h. Assemble air tubes; each air tube has O-rings (3), connectors (2), and check valve (1); lubricate O-ring areas

i. If machine will go unused, install air tubes into hopper, but do not connect to air pumps; otherwise, set air tubes aside until after machine has been primed

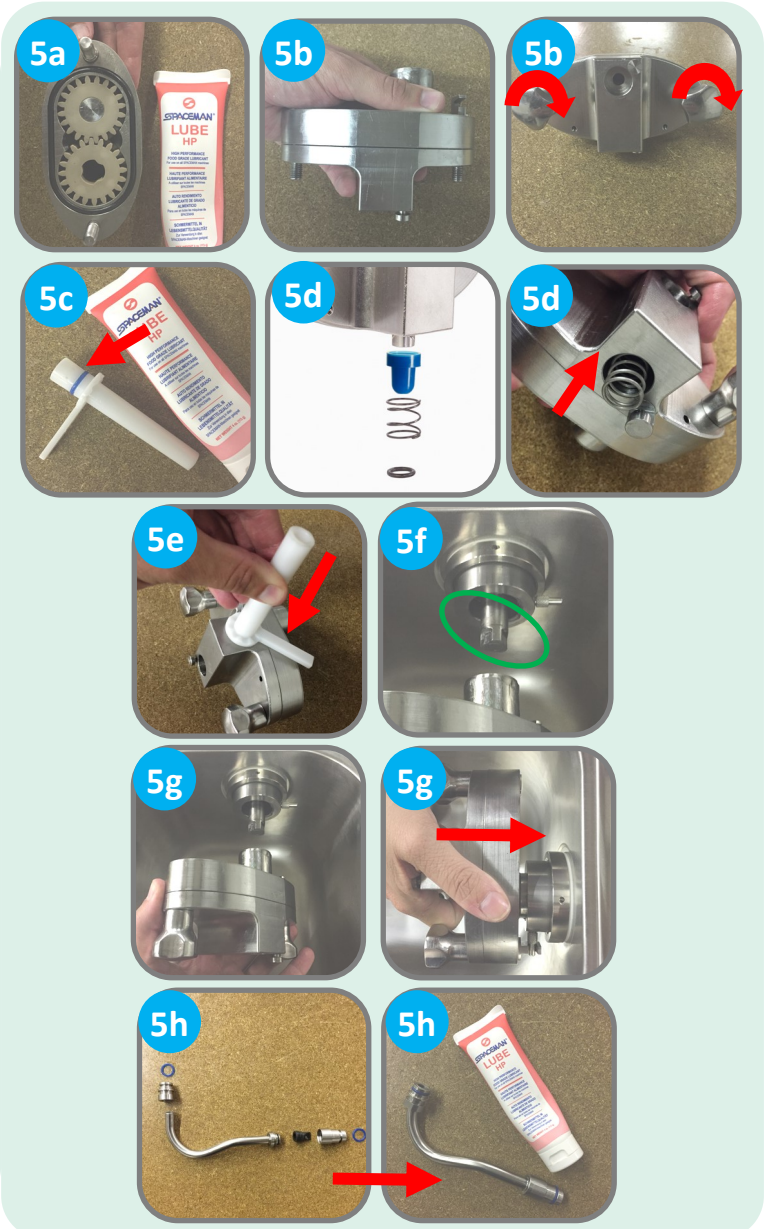

6. Install hopper lids, agitators, and drip trays

a. Coat inside of agitators (if present) with Spaceman lubricant and install with arrow pointing up

b. Install internal and front drip trays

c. If machine will be left unused, install air tubes and place hopper lids on top; otherwise, set air tubes aside until after machine has been primed

SANITIZATION

IMPORTANT: After sanitizing the machine, DO NOT rinse or touch areas that have been sanitized. Product must be added immediately. If new product will not be added immediately, rinse machine with clean water and loosen door hand-screws to allow cylinders to air-dry. Sanitize machine before using again.

CAUTION: Always use food-grade, no-rinse sanitizer to sanitize. If warm water is required to dissolve sanitizer, allow the solution time to cool before adding to machine.

1. Verify assembly is complete
2. If installed, remove hopper lids and air tubes
3. Verify draw valves are in the CLOSED position (UP)
4. Mix a minimum of 2 gallons of food-grade sanitizer in a bucket or container
5. Pour half the food-grade sanitizer solution into each hopper
6. Turn power switches ON
7. Press RESET buttons; press WASH buttons to begin cycle
8. Allow solution to agitate for 5 to 10 minutes; *NEVER leave machine on WASH for more than 10 minutes*
9. While agitating, gently use a clean brush to scrub and distribute sanitizer solution along hopper walls
10. Place a bucket or container below the draw valves
11. OPEN the draw valves (DOWN) and drain solution from the machine
12. Press RESET buttons to stop cycle

Frozen Product Operation

Add product to machine

NOTE: The mix-low lights illuminate **RED** when a hopper is low on product mix and automatically de-illuminate when machine is filled.

NOTE: Instructions assume product is added one hopper at a time. Repeat steps as needed.

1. Verify machine has been recently sanitized (within 1 hour); if machine has not been recently sanitized, verify door hand-screws are tight, and perform sanitizing steps (Page 15)
2. Thoroughly mix and prepare at least 2 gallons of product according to manufacturer instructions; mix should be cool and smooth (free of large chunks)
3. Place bucket or large container below draw valve
4. Pour 0.25 gallons of product into hopper
5. If machine has air pumps, *do not* fill product over small air inlet holes on the bottom of the air pump
6. OPEN draw handle (DOWN); sanitizer will start to flow out draw valve
7. Once sanitizer has been purged from the machine and a steady stream of product is flowing from the spout, CLOSE draw handle (UP)
8. Pour remaining product into hopper
9. Raise the prime plug on the top of the dispensing door until flow is 100% product
10. Push prime plug back down
11. If machine has air pumps:
    - —Press RESET, then press WASH
    - —Ensure product is coming out of the large hole near the top of the air pump
    - —Press RESET
12. Wash air tube and cap; install air tube in hopper (inlet hole on side of air tube at bottom)
13. Install air pump air tube, inserting air tube into hopper, then rotate and insert air pump connector into air pump; rotate connector to lock in place
14. Replace hopper lid
15. Product is now ready to freeze

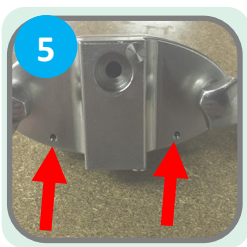

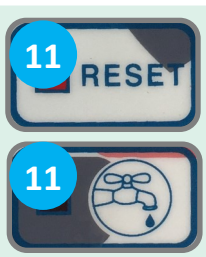

Freeze Product

CAUTION: *Never* disconnect air pump (if present) with the machine running. If disconnecting air pump, *first* press RESET to stop operations and open draw handles for 10 to 15 seconds to relieve pressure in cylinder.

1. Verify cylinder is full of mixed product and primed
2. Press FREEZE button
3. The motor will begin to agitate the product, and the cooling system will begin to freeze the product
4. Freezing product takes approximately 10 minutes
5. When product reaches the set viscosity, it is ready to dispense (viscosity can be changed in the Settings menu, Page 19)

Dispense Product

CLOSED

OPEN

Side draw handles dispense product from their respective hoppers. The middle draw handle twists product from the left and right hoppers.

1. OPEN draw handle (DOWN) until desired amount is dispensed
2. CLOSE draw handle (UP) when finished dispensing

Adjustment screws below draw handles control dispensing speed.

- Tighter (clockwise) reduces speed
- Looser (counter-clockwise) increases speed

Machine Power Reset

IMPORTANT: Machine shuts down automatically if cylinders experience freeze-up (usually because the viscosity is set too high for the selected product) to prevent motor damage. Use the green reset button to return the machine to normal operation.

Proper Machine Reset

1. Switch power switches OFF
2. Press green reset button on side or back of machine
3. Wait 15 to 20 minutes; switch power ON
4. Press RESET, then WASH buttons on front
5. Observe machine performance and return to normal use if functioning properly

CAUTION: If machine makes any abnormal noise during reset, immediately switch power OFF and contact service

NOTE: If machine doesn't turn on, turn power OFF, wait 30 minutes, and repeat steps 1 to 5. If problem persists, contact service team.

Frozen Product Operation

Standby Mode

IMPORTANT: When the machine will NOT be utilized for several hours, place it in STANDBY mode to conserve electricity and reduce product loss.

In STANDBY, product remains below 41°F in both the cylinders and hoppers, but will NOT be frozen.

To enter STANDBY mode:

- Press RESET buttons, then STANDBY buttons.
- Displays read STANDBY when machine is in STANDBY mode.

To exit STANDBY mode:

- Press RESET buttons.
- Machine is ready for a new mode selection.

Nightly Standby Procedure

Machines without air pumps experience the best-quality product after leaving machine in STANDBY overnight using the following procedure.

Store closing:

1. With machine in FREEZE mode, remove air tubes
2. Clean air tubes and insert into machine upside-down (inlet hole on the side of the air tube at the top)
3. Confirm product is above low-mix line in hoppers
4. Press RESET, press STANDBY

Store opening:

5. Open draw handles to draw 6 to 8 oz. of product; discard product
6. Press RESET, press FREEZE
7. Wait until machine finishes freeze cycle and motors stop turning
8. Remove and clean air tubes
9. Insert air tubes into machine with correct orientation (inlet hole on the side of the air tube at the bottom)
10. Machine is ready for normal operation

Adjust Product Consistency

IMPORTANT: Make only small adjustments to viscosity setting; allow at least 10 to 15 minutes between adjustments to evaluate product firmness. Viscosity settings should not need continuous adjustment and should be set between 1.75 and 3.25, with 2.50 a good starting place.

Press RESET to stop machine functions. Press and hold RESET until display shows settings (viscosity is the first setting shown). *If you scroll past the viscosity setting, hit RESET* until it comes back around.

Press STANDBY to increase viscosity (more firm).

Press P to decrease viscosity (less firm).

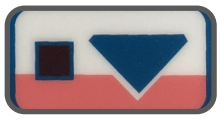

Press and hold ARROW for 3 seconds to save changes.

Press RESET to return to normal machine operation.

Press FREEZE to return to freezing operation.

Maintain Product Consistency

Machines without air pumps can experience product consistency changes if they go unused for an extended period of time. Product may become icy or dense if left in the freezing cylinder too long, often occurring during a business's longer slow-periods.

What to do: Add air to the freezing cylinder by following the closing/opening procedures in the previous column, ***omitting Step 4.***

Change product temperature in hoppers

IMPORTANT: If temperature setting is too cold, product will freeze around the sides of the hopper and potentially cause damage. Hopper temperature should be set above freezing between 37 and 40°F.

Press RESET to stop machine functions. Press and hold RESET until display shows settings.
Viscosity is the first setting shown; press RESET again (without holding), and temperature will be next.
If you scroll past the temperature setting, hit RESET until it comes back around.

Press STANDBY to increase temperature (warmer).

Press P to decrease temperature (cooler)

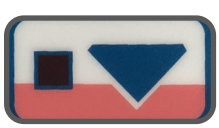

Press and hold ARROW for 3 seconds to save changes.

Press RESET to return to normal machine operation.

Press FREEZE to return to freezing operation.

Change date and time

Press RESET to stop all machine functions. Press and hold RESET until display shows settings.
Viscosity is the first setting shown; press RESET again twice (without holding) to reach the date/time setting.
If you scroll past the date/time setting, hit RESET until it comes back around.

Press FREEZE to toggle cursor between date/time fields. Once highlighted, a field can be changed.

Press STANDBY to increase highlighted number.

Press P to decrease highlighted number.

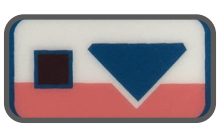

Press and hold ARROW for 3 seconds to save changes.

Press RESET to return to normal machine operation.

Press FREEZE to return to freezing operation.

Adjust advanced settings

There are several advanced settings that can be configured from the machine displays. Call Spaceman Technical Support to adjust advanced settings.

Troubleshooting

Problem: Hopper isn't cold enough

Probable Cause

1. Warm product was recently added
2. Hopper temperature setting is too high
3. Temperature offsets need adjustment

Remedy

1. Allow at least 1 hour after adding new mix for hopper temperatures to stabilize
2. Adjust hopper temperature warmer (Page 20)
3. Call Spaceman Technical Support

Problem: Hopper is freezing

Probable Cause

1. Inadequate mix in hopper
2. Hopper temperature setting is too low

Remedy

1. Ensure hopper is at least half full
2. Adjust hopper temperature warmer (Page 20)

Problem: Product is too soft

Probable Cause

1. Machine isn't cleaned/lubricated adequately
2. Inadequate mix in hopper
3. Improper mixing of product
4. Machine doesn't have adequate ventilation
5. Viscosity adjustment is set incorrectly

Remedy

1. Clean and properly lubricate machine daily
2. Ensure hopper is at least half full
3. Follow manufacturer instructions for mixing product; ensure correct mix ratios
4. Ensure at least 6-in. clearance on all sides
5. Raise viscosity setting as required (Page 19)

Problem: STOP 1—Low Temp Protect

Probable Cause

1. Inadequate mix in hopper
2. Improper mixing of product
3. Air tube isn't installed correctly
4. Viscosity adjustment is set incorrectly
5. Product is being drawn too quickly

Remedy

1. Ensure hopper is at least half full
2. Follow manufacturer instructions for mixing product; ensure correct mix ratios
3. Clean air tube, ensure proper orientation
4. Lower viscosity setting as required (Page 19)
5. Ensure air tube isn't clogged, allow machine 2 to 3 seconds between servings

Problem: STOP 2—Motor Overload

Probable Cause

1. Viscosity adjustment is set incorrectly
2. Inadequate mix in hopper
3. Improper mixing of product
4. Air tube isn't installed correctly
5. Product is being drawn too quickly

Remedy

1. Lower viscosity setting as required (Page 19)
2. Ensure hopper is at least half full
3. Follow manufacturer instructions for mixing product; ensure correct mix ratios
4. Clean air tube, ensure proper orientation
5. Ensure air tube isn't clogged, allow machine 2 to 3 seconds between servings to recover

PROBLEM: STOP 4—TEMPERATURE

Probable Cause

1. Malfunctioning temperature probe

Remedy

1. Replace temperature probe

PROBLEM: STOP 6—MOTOR AMP

Probable Cause

1. Malfunctioning power board

Remedy

1. Replace power board

PROBLEM: MACHINE IS MAKING NOISE

Probable Cause

1. Improper assembly
2. Wearable parts need replacement
3. Internal cleaning/maintenance required
4. Damaged internal parts

Remedy

1. Stop machine use, drain product with machine powered OFF; clean and inspect parts.
2. Replace wearable parts (including scraper blades) at least once every 3 months
3. Contact Spaceman USA Technical Support
4. Inspect parts carefully for damage, ensure proper assembly; replace as required

PROBLEM: PRODUCT LEAKS EXCESSIVELY INTO INTERNAL DRIP TRAY

Probable Cause

1. Improper or inadequate lubrication of drive shaft gasket
2. Damaged, missing, or improperly installed drive shaft gasket

Remedy

1. Use sufficient food-grade lubricant, and add sufficient lubricant inside drive shaft gasket during assembly (Page 13)
2. Replace drive shaft gaskets every 1–3 months

PROBLEM: PRODUCT LEAKS EXCESSIVELY FROM DISPENSING DOOR SPOUT

Probable Cause

1. Improper or inadequate lubrication of draw valve and draw valve O-rings
2. Cracked, broken, or worn draw valve O-rings

Remedy

1. Use sufficient food-grade lubricant when assembling draw valves (Page 13)
2. Replace O-rings every 1-3 months

PROBLEM: MACHINE SHUTS DOWN AUTOMATICALLY

Probable Cause

1. Cylinders are experiencing freeze-up (usually due to viscosity being set too high for selected product)

Remedy

1. Reset machine (Page 18), and lower viscosity as required (Page 19)

Machine Specifications

SM-6378H
Soft Serve Freezer

Product Information

Type	Floor Standing
Flavors	2 + Twist
Cooling	Air Cooled
Freezing Cylinders	2x 3.2 L / 3.4 qt
Product Mix Hoppers	2x 15.0 L / 15.9 qt
Output (4oz Servings)	80.0 qt / hr 642 servings / hr
Motor	2x 1.00 HP, 750W
Compressor (Main)	2x 6500 BTU, R404A
Compressor (Auxilliary)	1x 480 BTU, R134A

Features

Machine Controls	Dual, Digital
Regrigerated Hopper	Yes, Digital Control
Hopper Agitator	Yes
Temperature Display	Yes
Standby Mode	Yes
Low Mix Indicator Light	Yes
Low Mix Indicator Alarm	No
Low Temperature Protection	Yes
Motor Amperage Protection	Yes, Mechanical
High Pressure Protection	Yes
Thermal Overload Protection	Yes

Intertek Intertek

Description

A high capacity, twin-twist, gravity feed, floor standing soft serve freezer. Capable of producing a variety of products including: Soft Serve, Frozen Yogurt, Ice Cream, Custards, and Sorbets. Independent digital control systems automatically regulate and maintain consistent product quality on each side. Refrigerated hoppers and Standby Mode keeps product fresh, even overnight.

Custom Options

Air Pump, Water Cooled, Air Chute, Spinner (1 or 2), 3-Phase Power, Dual Plug

Electrical Specifications

	Maximum Fuse Size	Min. Circuit Ampacity	Poles (P) Wires (W)
208-230/60/1	1 x 30A	1 x 24A	2P / 3W
208-230/60/3	1 x 30A	1 x 20A	3P / 4W

Electrical Plug: *1x NEMA L6-30 (2P) or 1x NEMA L15-30 (3P)*

Size Specifications

	Machine		Shipping	
Weight	225 kg	496 lbs	245 kg	540 lbs
Depth (mm / in)	702*	27.7*	895	35.3
Width (mm / in)	532*	21.0*	715	28.2
Height (mm / in)	1562	61.5	1740	68.5

Shipping Volume: *1.15 CBM / 39.4 CBF*

** Machine Requires Minimum 6" Clearance on all sides*

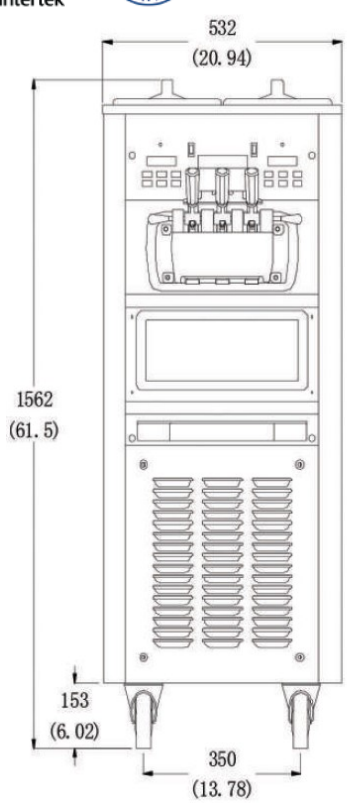

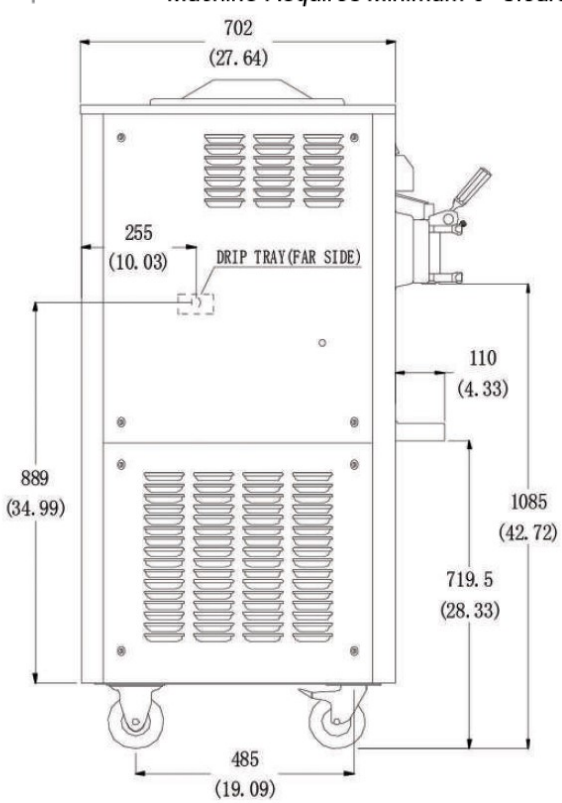

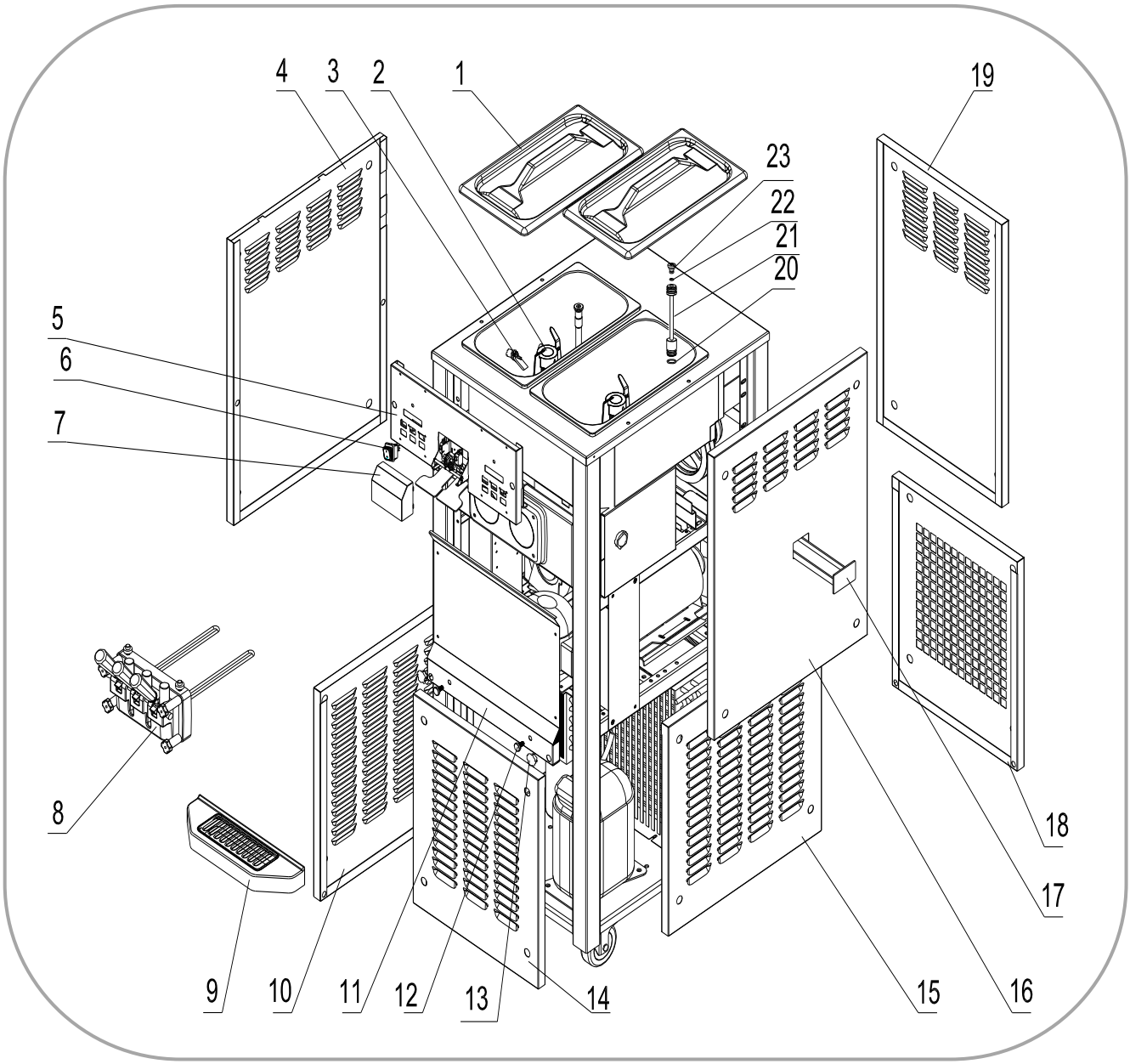

Item	Part #	Description
1	3.4.03.01.004	Hopper Lid
2	2.1.1.23.0001	Agitator Blade
3	3.1.03.04.009	Low Mix Sensor
4	2.3.4.19.003	Panel - Left - U
5	2.3.4.07.008	Panel - Front - U
6	3.1.03.03.004	Power Switch
7	3.4.07.07.004	Switch Cover
8	2.1.1.15.0005	Dispensing Door

Item	Part #	Description
9	3.4.04.01.003	Drip Tray
10	2.3.4.22.003	Panel - Left - L
11	2.3.4.16.004	Panel - Front - M
12	3.6.39.004	Drip Tray Mount
13	3.4.07.01.001	Bolt Cover
14	2.3.4.17.010	Panel - Front - L
15	2.3.4.22.003	Panel - Right - L
16	2.3.4.21.003	Panel - Right - U

Item	Part #	Description
17	3.4.04.02.001	Internal Drip Tray
18	2.3.4.15.003	Panel - Rear - L
19	2.3.4.14.003	Panel - Rear - U
20	3.4.08.01.002	O-Ring - Air Tube
21	2.1.1.22.0003	Air Tube
22	3.4.08.01.028	O-Ring - Cap
23	2.1.3.23.0001	Air Tube Cap

Dispensing Door and Beater

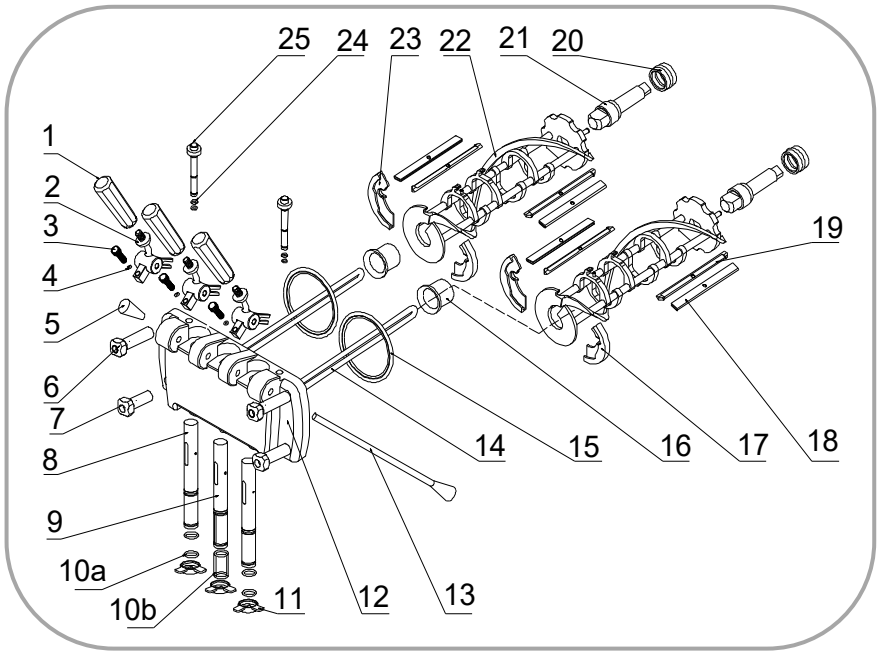

Item	Part #	Description
1	3.4.05.01.001	Dispensing Handle
2	2.1.3.26.0002	Handle Seat
3	3.6.39.008	Adjustment Screw
4	3.4.08.01.012	O-Ring - Screw
5	2.1.3.27.0025	Nut - Retention Pin
6	3.4.05.02.004	Hand Screw - Long
7	3.4.05.02.003	Hand Screw - Short
8	2.1.3.01.0005	Draw Valve - Side
9	2.1.3.02.0002	Draw Valve - Mid

Item	Part #	Description
10a	3.4.08.01.006	O-Ring - Valve - S
10b	3.4.08.01.015	H-Ring - Valve
11	3.4.05.03.004	Star Cap - Small
12	2.1.3.14.0005	Dispensing Door
13	2.1.3.27.0003	Retention Pin
14	2.1.1.11.0002	Beater Rod
15	3.4.08.02.003	Door Gasket
16	3.4.01.03.002	Beater Guide
17	3.4.01.02.001	Beater Shoe - R

Item	Part #	Description
18	3.4.02.01.001	Scraper Blade
19	2.3.4.04.002	Scraper Blade Clip
20	3.4.07.05.002	Drive Shaft Gasket
21	2.1.3.25.0002	Drive Shaft
22	2.1.1.10.0001	Beater
23	3.4.01.01.001	Beater Shoe - L
24	3.4.08.01.013	O-Ring - Prime
25	2.1.3.02.0015	Prime Plug

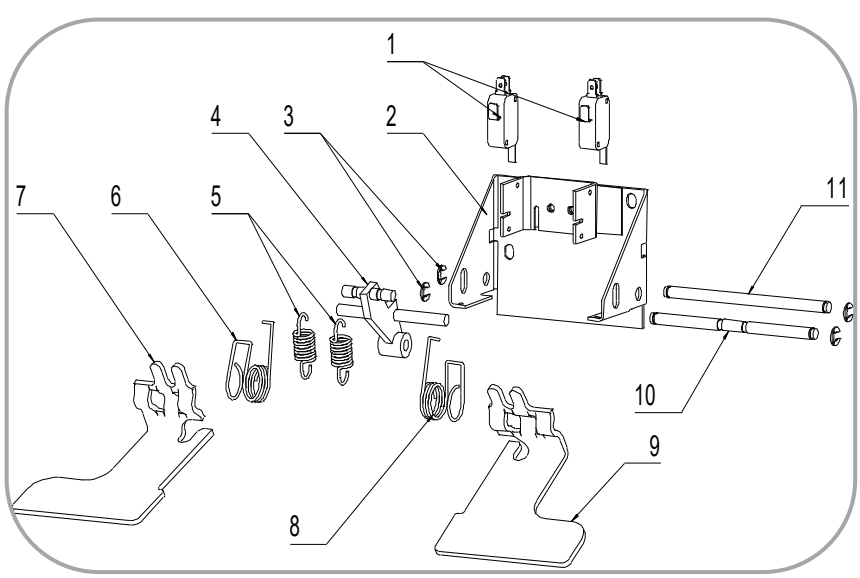

Item	Part #	Description
1	3.1.03.01.004	Switch - Draw
2	2.1.1.19.0010	Switch Mount
3	3.6.34.002	C-Clip - #6
4	2.1.1.19.0006	Draw Switch Lever
5	3.6.02.002	Spring - Draw
6	3.6.01.001	Spring - Return - L
7	2.1.4.05.011	Draw Arm - L
8	3.6.01.011	Spring - Return - R
9	2.1.4.05.012	Draw Arm - R
10	2.1.4.05.001	Retention Pin - F
11	2.1.4.05.002	Retention Pin - R

Hopper Agitator

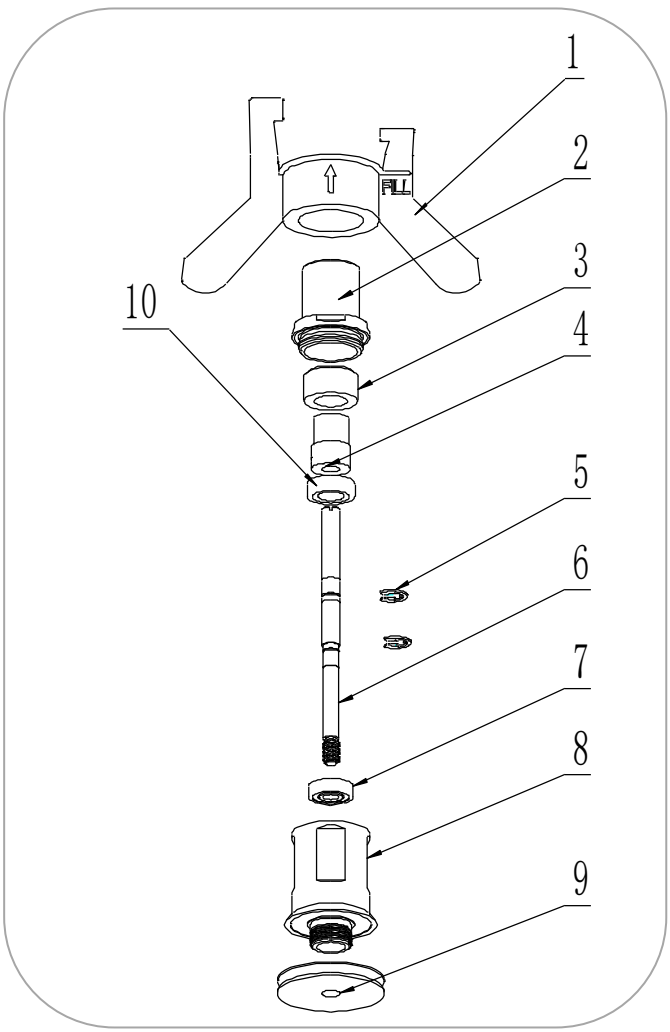

Item	Part #	Description
1	2.1.1.23.0001	Agitator Blade
2	2.1.4.02.005	HA Housing Cap
3	2.1.4.02.002	HA Main Magnet
4	2.1.4.02.003	HA Shaft Magnet
5	3.6.34.003	C-Clip
6	2.1.3.42.0001	Drive Shaft
7	3.3.02.07.004	HA Bearing - Lower
8	2.1.4.02.001	HA Housing
9	2.1.4.02.015	Pulley - HA
10	3.3.02.07.003	HA Bearing - Upper
11	2.1.4.02.016	Pulley - Double

Specs—Internal Parts

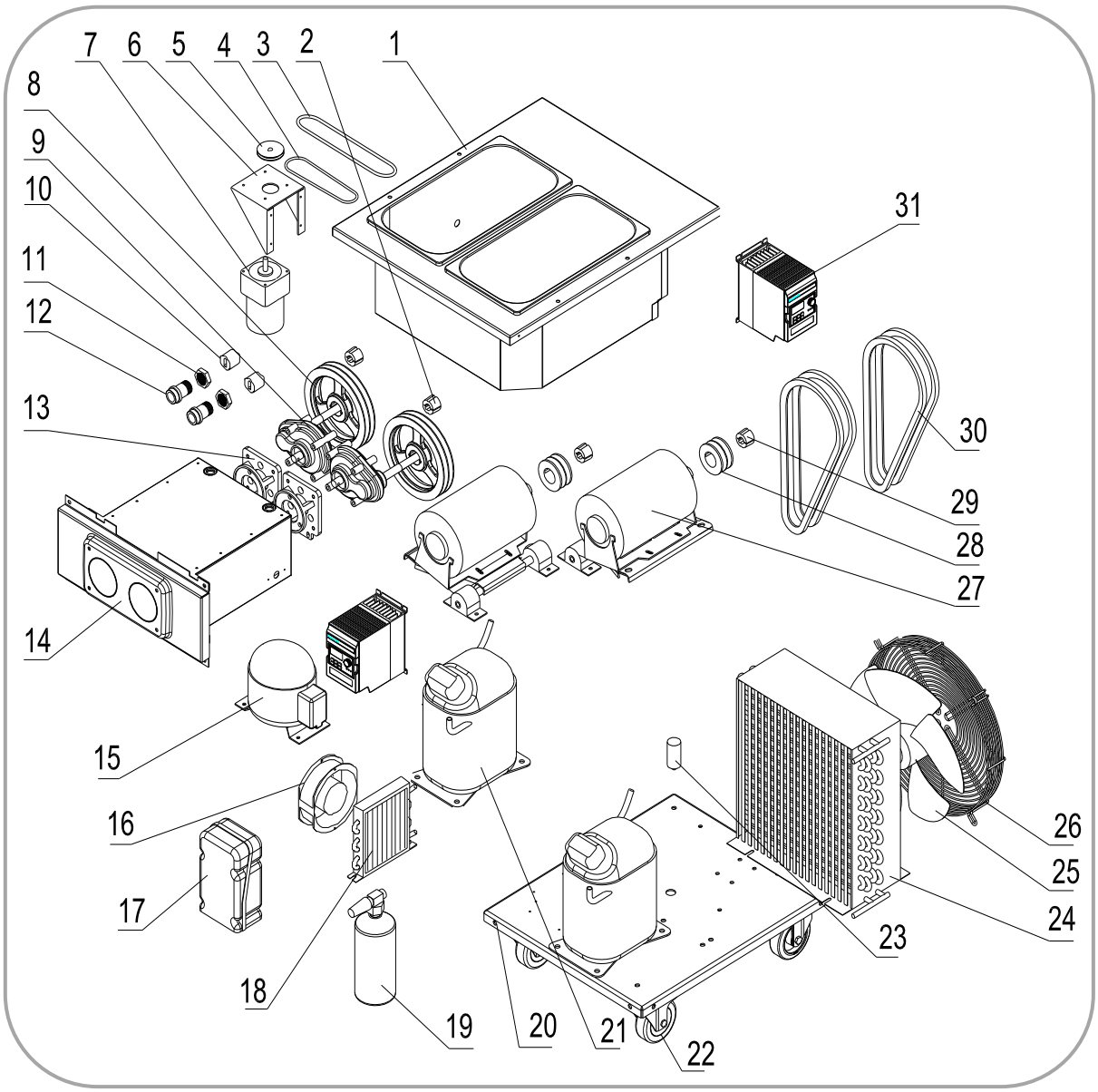

Item	Part #	Description
1	2.1.1.05.0031	Hopper Assembly
2	3.3.04.01.005	Bushing - 1008-16
3	2.1.4.08.021	Belt - HA - 630mm
4	2.1.4.08.002	Belt - HA - 360mm
5	3.3.04.04.008	Pulley - HA - 34mm
6	2.3.4.45.007	HA Motor Mount
7	3.3.01.01.001	HA Motor
8	3.3.04.02.007	Pulley - 182x2-1008
9	3.3.02.01.002	Gear Box
10	3.3.02.04.002	Drive Coupling
11	3.3.02.02.010	Nut - RS Bearing
12	3.3.02.02.002	Rear Shell Bearing

Item	Part #	Description
13	2.1.3.15.0003	Gear Box Mount
14	2.1.1.06.0045	Cylinder Assembly
15	3.2.01.01.002	Compressor - Aux
16	3.2.03.01.001	Fan Motor - Aux
17	3.2.01.04.004	Start Component
18	3.2.02.01.001	Condenser - Aux
19	3.2.04.08.001	Liquid Receiver
20	2.2.4.01.0011	Chassis
21	3.2.01.02.005	Compressor - Main
22	3.3.05.02.002	Caster - Swivel
23	3.2.03.04.001-2	Capacitor - Fan
24	3.2.02.01.009	Condenser - Main

Item	Part #	Description
25	3.2.03.04.001	Fan Motor - Main
26	3.2.03.04.001-1	Fan Cover
27	3.3.01.04.005	Motor - 750W
28	3.3.04.02.001	Pulley - 63x2-1008
29	3.3.04.01.005	Bushing - 1008
30	3.3.03.01.003	Belt - XPA1030
31	3.1.01.08.006	Inverter - 0.5KW

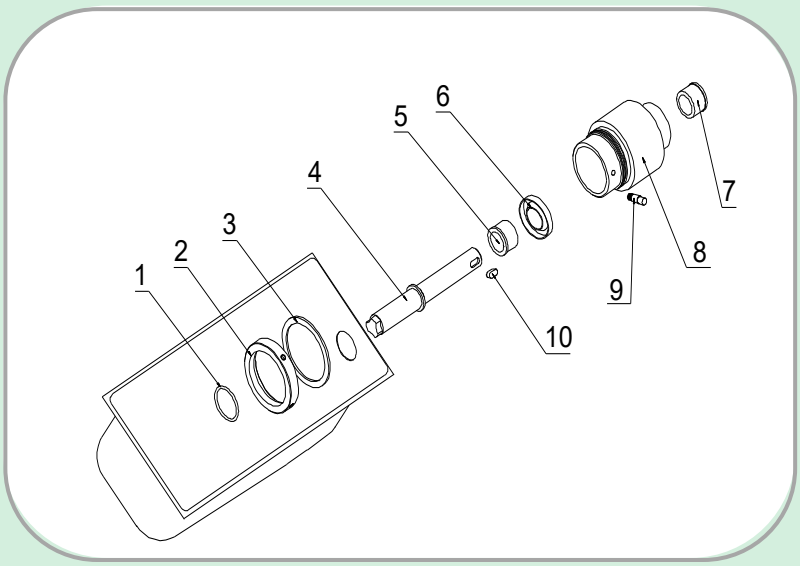

Item	Part #	Description
1	3.4.08.03.010	Nylon Ring - Shaft
2	2.1.4.01.016	Nut - Pump Seat
3	3.4.08.03.012	Nylon - Pump Seat
4	2.1.4.01.018	Drive Shaft - Pump
5	3.3.02.06.001	Bearing - Front
6	3.3.02.09.002	Bearing Gasket
7	3.3.02.06.001	Bearing - Rear
8	2.1.4.01.017	Air Pump Seat
9	3.6.39.010	Lock Pin
10	3.6.33.002	Drive Shaft Key

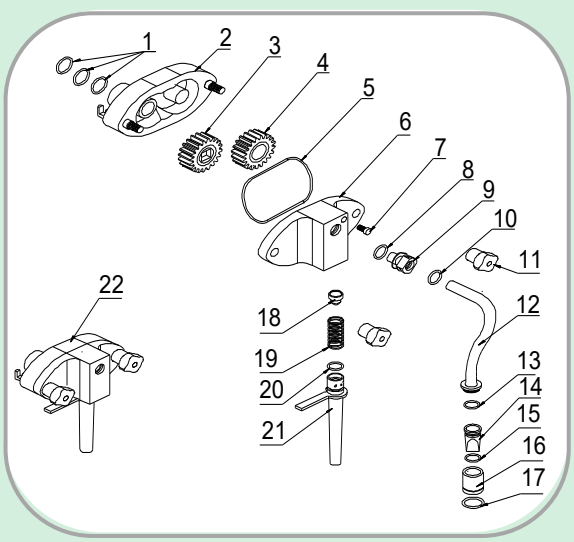

Item	Part #	Description
1	3.4.08.01.025	O-Ring
2	2.1.4.01.004	Air Pump Shell
3	2.1.4.01.013	Driving Gear
4	2.1.4.01.012	Driven Gear
5	3.4.08.01.004	Air Pump Gasket
6	2.1.4.01.003	Air Pump Cover
7	2.1.4.01.029	Lock Nut
8	3.4.08.01.003	O-Ring - Connector
9	2.1.4.01.023	Connector—Pump
10	3.4.08.01.008	O-Ring - Connector
11	2.1.4.01.002	Hand Screws

Item	Part #	Description
12a	2.1.4.01.044	Air Tube - Right
12b	2.1.4.01.043	Air Tube - Left
13	3.4.08.01.003	O-Ring - Tube
14	2.1.4.01.035	Check Valve
15	3.4.08.01.023	O-Ring - Valve
16	2.1.4.01.039	Connector - Hopper
17	3.4.08.01.037	O-Ring - Connector
18	3.4.07.06.003	Plug
19	3.6.03.003	Spring
20	3.4.08.01.003	O-Ring - Suction
21	2.1.4.01.049	Suction Tube - 200
22	2.1.1.13.0001	AP Assembly

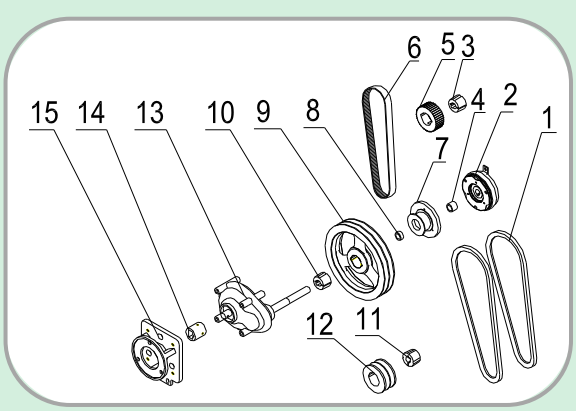

Item	Part #	Description
1	3.3.03.01.014	Belt - XPA1080
2	3.1.01.06.001	Micro Clutch
3	3.3.04.01.005	Bushing - 1008
4	3.3.04.06.001	Bushing - Clutch
5	3.3.04.03.001	Pulley - 63-5-1008
6	3.3.03.02.005	Belt - 5M780
7	3.3.04.03.002	Pulley - 50-5M
8	3.3.04.06.002	Bushing - Clutch

Item	Part #	Description
9	3.3.04.02.008	Pulley - 212x2-1210
10	3.3.04.01.007	Bushing - 1210
11	3.3.04.01.005	Bushing-1008
12	3.3.04.02.001	Pulley - 63x2-1008
13	3.3.02.01.007	Gear Box - Long
14	3.3.02.04.002	Drive Coupling
15	2.1.3.15.0003	Gear Box Mount

Specs—Wiring, Left

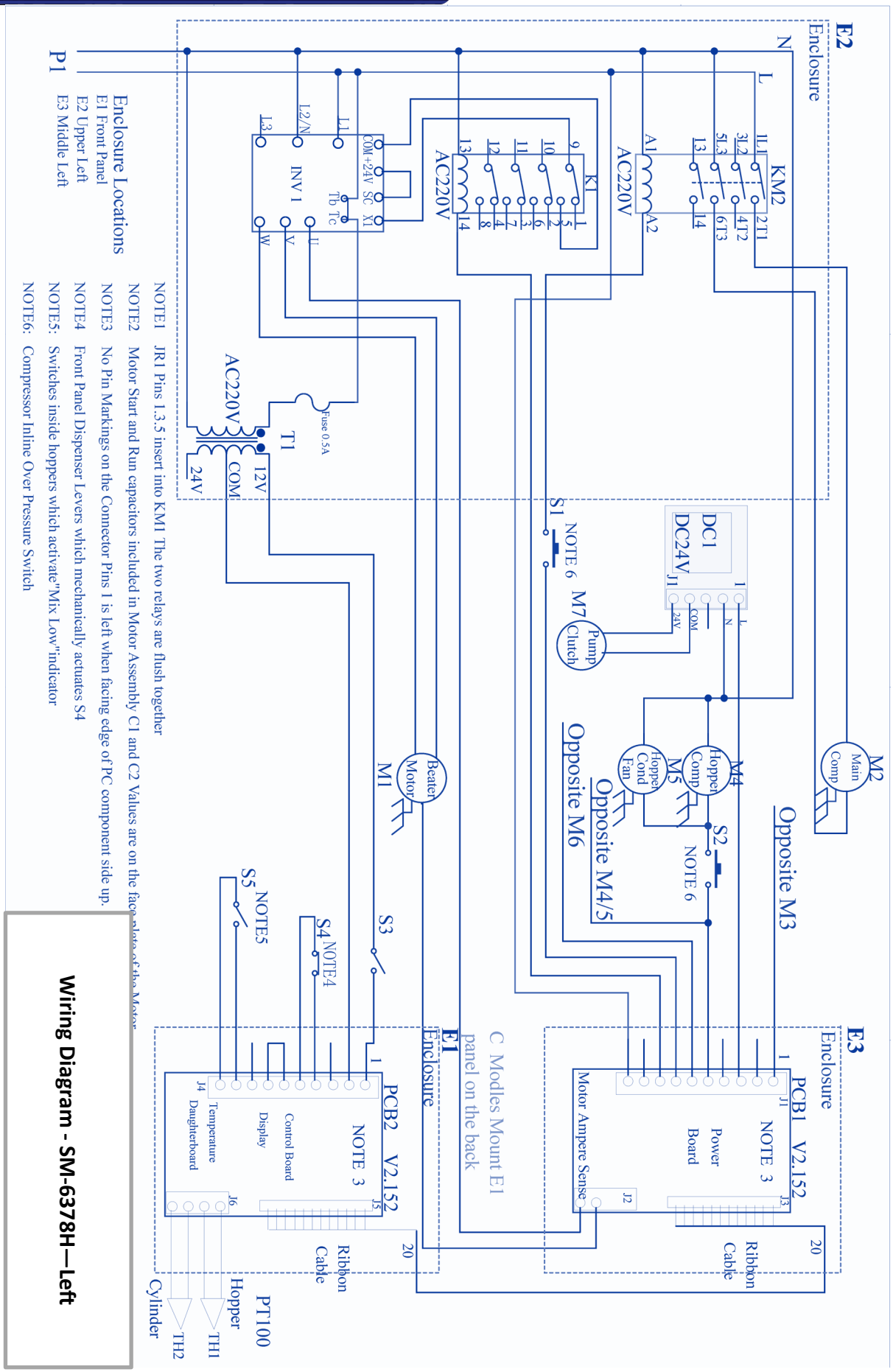

Wiring Diagram - SM-6378H—Left

Item	Part #	Description	Item	Part #	Description	Item	Part #	Description	Item	Part #	Description
M1	3.3.01.04.005	Motor - 750W	M6	3.3.01.01.001	Agitator Motor	TH	3.1.02.13.020	Thermostat	S4	3.1.03.01.004	Draw Switch
M2	3.2.01.02.005	Compressor	M7	3.1.01.06.001	Micro Clutch	PC1	2.2.1.01.0007	Power Board	S5	3.1.03.04.009	Low Mix Sensor
M3	3.2.03.04.001	Fan Motor - Main	INV	3.1.01.08.006	Inverter	PC2	2.2.1.01.0004	Control Board	F	3.1.02.08.002	Fuse - 0.5A
M4	3.2.01.01.002	Compressor - Aux	KM	3.1.01.01.010	Contactor	S1/2	3.2.04.06.004	Pressure Switch	DC	3.1.01.05.004	Transformer
M5	3.2.03.01.001	Fan Motor - Aux	T	3.1.01.04.007	Transformer	S3	3.1.03.03.004	Power Switch			

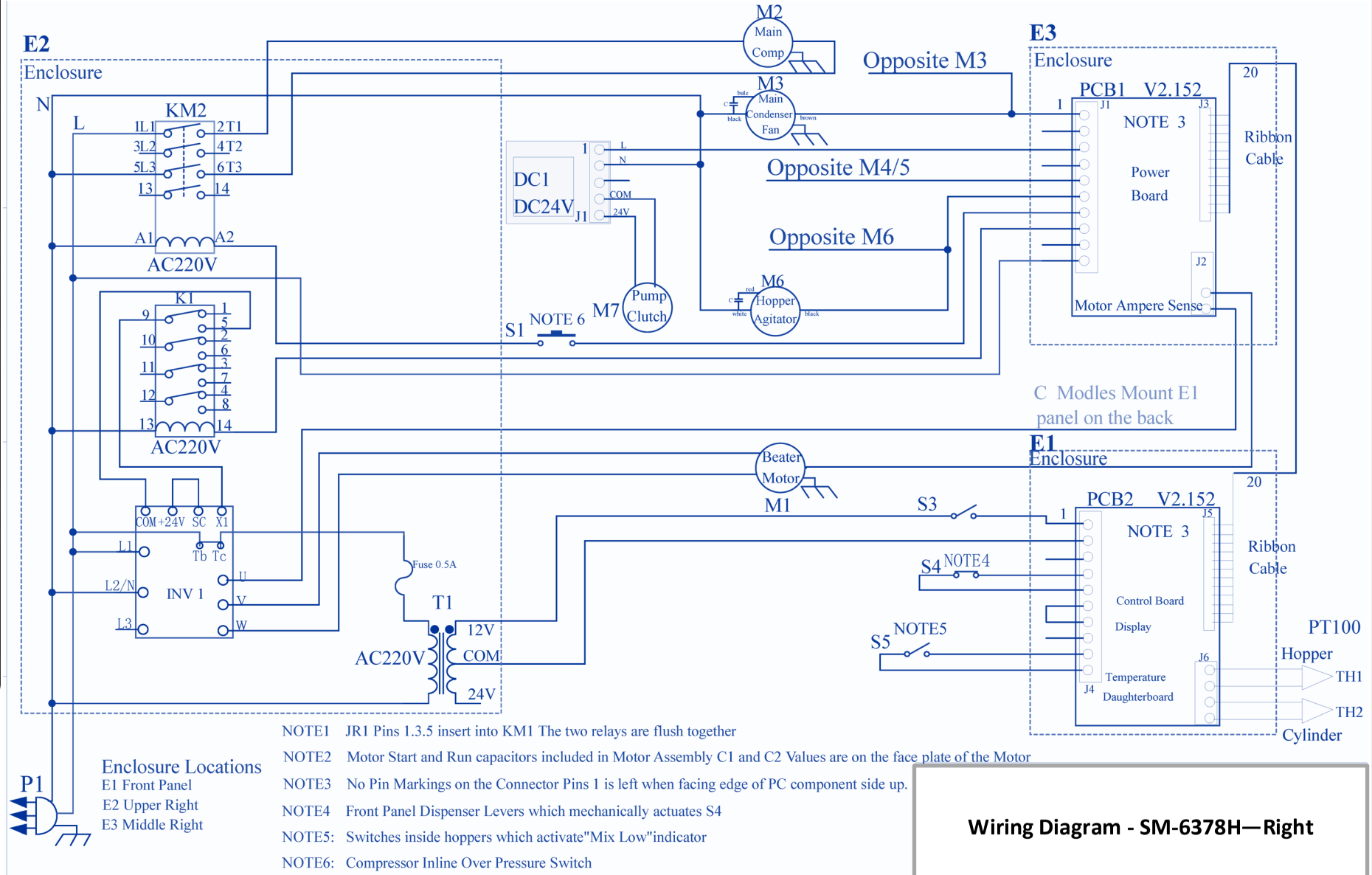

NOTE1 JR1 Pins 1.3.5 insert into KM1 The two relays are flush together

NOTE2 Motor Start and Run capacitors included in Motor Assembly C1 and C2 Values are on the face plate of the Motor

NOTE3 No Pin Markings on the Connector Pins 1 is left when facing edge of PC component side up.

NOTE4 Front Panel Dispenser Levers which mechanically actuates S4

NOTE5: Switches inside hoppers which activate"Mix Low"indicator

NOTE6: Compressor Inline Over Pressure Switch

Wiring Diagram - SM-6378H—Right

Item	Part #	Description	Item	Part #	Description	Item	Part #	Description	Item	Part #	Description
M1	3.3.01.04.005	Motor - 750W	M6	3.3.01.01.001	Agitator Motor	TH	3.1.02.13.020	Thermostat	S4	3.1.03.01.004	Draw Switch
M2	3.2.01.02.005	Compressor	M7	3.1.01.06.001	Micro Clutch	PC1	2.2.1.01.0007	Power Board	S5	3.1.03.04.009	Low Mix Sensor
M3	3.2.03.04.001	Fan Motor - Main	INV	3.1.01.08.006	Inverter	PC2	2.2.1.01.0004	Control Board	F	3.1.02.08.002	Fuse - 0.5A
M4	3.2.01.01.002	Compressor - Aux	KM	3.1.01.01.010	Contactor	S1/2	3.2.04.06.004	Pressure Switch	DC	3.1.01.05.004	Transformer
M5	3.2.03.01.001	Fan Motor - Aux	T	3.1.01.04.007	Transformer	S3	3.1.03.03.004	Power Switch			

Email: service@spacemanusa.com
www.spacemanusa.com
Phone: (720) 328-1020